Seagate

Marathon 2250

Marathon 1680

ATA Interface Drives

Product Manual

Marathon 2250 (ST92255AG)

Marathon 1680 (ST91685AG)

ATA Interface Drives

Product Manual

MARATHON

©1996 Seagate Technology, Inc. All rights reserved

Publication Number: 36337-101, Rev. A, November 1996

Seagate, Seagate Technology, and the Seagate logo are registered trademarks of Seagate Technology, Inc. Medalist and SafeRite are trademarks of Seagate Technology. Other product names are registered trademarks or trademarks of their owners.

Seagate reserves the right to change, without notice, product offerings or specifications. No part of this publication may be reproduced in any form without written permission from Seagate Technology, Inc.

Contents

Introduction **1**

Specification summary table **2**

1.0 Drive specifications **5**

1.1 Formatted capacity 5

1.1.1 Default logical geometry 5

1.1.2 Supported CHS translation geometries 5

1.2 Physical organization 6

1.3 Recording and interface technology 6

1.4 Physical characteristics 7

1.5 Seek time 7

1.6 Start times 8

1.7 Power specifications 8

1.7.1 Power consumption 8

1.7.2 Power recovery 9

1.7.3 Conducted noise 9

1.7.4 Voltage tolerance 10

1.7.5 Power-management modes 10

1.8 Environmental tolerances 12

1.8.1 Ambient temperature 12

1.8.2 Temperature gradient 12

1.8.3 Humidity 12

1.8.4 Altitude 12

1.8.5 Shock 12

1.8.6 Vibration 13

1.9 Drive acoustics 14

1.10 Reliability 14

1.11 Agency certification 15

1.11.1 Safety certification 15

1.11.2 Electromagnetic Compatibility 15
1.11.3 FCC verification 15

2.0 Drive mounting and configuration 17

2.1 Handling and static-discharge precautions 17
2.2 Jumper settings 17
2.2.1 Master/slave configuration 17
2.3 Remote LED configuration 19
2.4 Drive mounting 19
2.5 ATA interface connector 23

3.0 ATA Attachment-3 Interface (ATA-3) 25

3.1 ATA interface signals and connector pins 25
3.1.1 AT bus signal levels 25
3.2 ATA Interface commands 27
3.2.1 Supported ATA commands 27
3.2.2 Identify Drive command 29
3.2.3 Set Features command 32
3.2.4 S.M.A.R.T. commands 34
3.2.5 Drive Security commands 35

Appendix. Compatibility Notes 37

Figures

Figure 1. Typical startup and operation current profile. 9
Figure 2. Connector and master/slave jumper setup 18
Figure 3. Drive mounting dimensions—side and bottom view. . . . 20
Figure 4. Drive mounting dimensions—end view 21
Figure 5. ATA Interface connector dimensions 23
Figure 6. I/O pins and supported ATA signals 26

Introduction

The Marathon™ 2250 (ST92255AG) and Marathon 1680 (ST91685AG) provide very high storage capacity in a small, 17-mm hard disc drive.

Key Features:

- Low power consumption
- Compact, SFF-8200-compatible form-factor
- High rotational speed for fast internal data transfer
- Quiet operation
- SafeRite™ shock protection
- Support for PIO modes 0, 1, 2, 3 and 4, as well as single-word and multiword DMA modes 0, 1 and 2
- High instantaneous (burst) data-transfer rates (up to 16.6 Mbytes per second) using PIO mode 4 and DMA mode 2
- 103-Kbyte adaptive multisegmented cache
- Fast caching and on-the-fly error-correction algorithms
- Fast microprocessor for low command overhead
- Support for S.M.A.R.T. drive monitoring and reporting
- Support for drive password security
- Support for Read/Write Multiple commands
- Support for autodetection of master/slave drives using cable-select (CSEL) and DASP– signals

Specification summary table

The specifications listed in this table are for quick reference. For details on a specification measurement or definition, see the appropriate section of this manual.

Drive Specification	**Marathon 2250**	**Marathon 1680**
Guaranteed Mbytes (1 Mbyte=10^6 bytes)	2,250	1,680
Guaranteed sectors	4,394,940	3,282,490
Bytes per sector	512	
Default sectors per track	63	63
Default read/write heads	16	16
Default cylinders	4,360	3,256
Physical read/write heads	10	8
Discs	5	4
Recording density (bits/inch, max)	120,000	
Track density (tracks/inch)	5,555	
Areal density (Mbits/inch^2)	666	
Spindle speed (RPM)	4,508	
Internal data-transfer rate (Mbits/sec max)	60.8	
I/O data-transfer rate (Mbytes/sec max)	16.6	
ATA data-transfer modes supported	PIO modes 0, 1, 2, 3, 4 and multiword DMA modes 0, 1, 2	
Cache buffer (Kbytes)	103	
Height (mm max)	17.2	
Width (mm max)	70.1	
Length (mm max)	100.45	
Weight (grams typical)	204	200
Track-to-track seek time (msec typical)	4 (read), 5 (write)	
Average seek time (msec typical)	12 (read), 14 (write)	
Full-stroke seek time (msec max)	26 (read), 28 (write)	
Average latency (msec)	6.65	

Drive Specification	**Marathon 2250**	**Marathon 1680**
Power-on to ready (sec typical)	7	
Standby to ready (sec typical)	3	
Spinup current (peak)	1.3 amps	
Read/Write power and current (typical)	2.5 watts, 0.5 amps	
Seek power and current (typical)	2.5 watts, 0.5 amps	
Idle mode power and current (typical)	1.2 watts, 0.24 amps	
Standby mode power and current (typical)	0.3 watts, 0.06 amps	
Sleep mode power and current (typical)	0.1 watts, 0.02 amps	
Voltage tolerance (including noise)	+5 volts, ±5%	
Ambient temperature (°C)	5 to 55 (op.), –40 to 70 (nonop.)	
Temperature gradient (°C per hour max)	30	
Relative humidity (operating)	8% to 80% (10% per hour max grad.)	
Wet bulb temperature (°C max)	29.4 (op.), 40 (nonop.)	
Altitude (meters above mean sea level, max)	–300 to 3,040 (op.), –300 to 12,190 (nonop.)	
Shock, operating (Gs max)	125 (2 msec)	
Shock, nonoperating (Gs max, 2 msec)	350	
Vibration (Gs max at 5–400 Hz, without physical damage or loss of data)	0.75 (op.) 4.0 (nonop.)	
Drive acoustics (bels—sound power) Idle mode (dBA—sound pressure)	3.5 (typical), 3.8 (max) 24 (typical), 28 (max)	
Drive acoustics (bels—sound power) Seek mode (dBA—sound pressure)	3.8 (typical), 4.1 (max) 26 (typical), 30 (max)	
Nonrecoverable read errors	1 per 10^{13} bits read	
Mean time between failures (power-on hours)	300,000	
Contact start-stop cycles (40°C, ambient humidity)	50,000	
Service life (years)	5	

1.0 Drive specifications

Unless otherwise noted, all specifications are measured under ambient conditions, at 40°C, at sea level and nominal power.

1.1 Formatted capacity

	Marathon 2250	Marathon 1680
Guaranteed Kbytes	2,250,209	1,680,634
Guaranteed sectors	4,394,940	3,282,490
Bytes per sector	512	512

Note. DOS systems are not able to access more than 528 Mbytes unless: 1) the host system supports and is configured for LBA addressing or for extended CHS addressing, or 2) the host system contains a specialized drive controller, or 3) the host system runs BIOS translation software. In addition, older BIOSs cannot address more than 2.1 Gbytes (over 4096 cylinders) on a single partition. If you encounter this problem with the ST92255AG, divide the drive into two partitions or upgrade your BIOS. Please contact your Seagate representative for additional information.

1.1.1 Default logical geometry

CHS Mode	Marathon 2250	Marathon 1680
Sectors per track	63	63
Read/write heads	16	16
Cylinders	4,360	3,256

LBA Mode

When addressing either drive in LBA mode, all blocks (sectors) are consecutively numbered from 0 to *n*-1.

1.1.2 Supported CHS translation geometries

The Marathon 2250 supports any translation geometry that satisfies *all* of the following conditions:

- Sectors per track ≤ 63
- Read/write heads ≤ 16
- (Sectors per track) × (read/write heads) × (cylinders) ≤ 4,394,940

The Marathon 1680 supports any translation geometry that satisfies *all* of the following conditions:

- Sectors per track ≤ 63
- Read/write heads ≤ 16
- (Sectors per track) × (read/write heads) × (cylinders) ≤ 3,282,490

1.2 Physical organization

	Marathon 2250	**Marathon 1680**
Read/Write heads	10	8
Discs	5	4

1.3 Recording and interface technology

	Marathon 2250 and Marathon 1680
Interface	ATA
Recording method	8/9
Recording density (bits/inch)	120,000
Track density (tracks/inch)	5,555
Areal density (Mbits/inch^2)	666
Spindle speed (RPM) (± 0.5%)	4,508
Internal data-transfer rate (Mbits per sec max—ZBR)	60.8
I/O data-transfer rate (Mbytes per sec max)	16.6 (PIO mode 4 with IORDY) 16.6 (multiword DMA mode 2)
Interleave	1:1
Cache buffer (Kbytes)	103

1.4 Physical characteristics

		Marathon 2250	Marathon 1680
Maximum height	(inches)	0.676	0.676
	(mm)	(17.2)	(17.2)
Maximum width	(inches)	2.76	2.76
	(mm)	(70.1)	(70.1)
Maximum length	(inches)	3.955	3.955
	(mm)	(100.45)	(100.45)
Typical weight	(ounces)	7.19	7.05
	(grams)	(204)	(200)

Note. Maximum length excludes I/O connector pins that may extend up to 0.015 inches beyond the edge of the head/disc assembly, per SFF 8004 specification.

1.5 Seek time

All seek times are measured using a 25 MHz 486 AT computer (or faster) with a 8.3 MHz I/O bus. The measurements are taken with nominal power at sea level and 40°C ambient temperature. The specifications in the table below are defined as follows:

- Track-to-track seek time is an average of all possible single-track seeks in both directions.
- Average seek time is a true statistical random average of at least 5,000 measurements of seeks between random tracks, less overhead.
- Full-stroke seek time is one-half the time needed to seek from the first data cylinder to the maximum data cylinder and back to the first data cylinder. The full-stroke typical value is determined by averaging 100 full-stroke seeks in both directions.

Seek type	Typical read (msec)	Typical write (msec)
Track-to-track	4	5
Average	12	14
Full-stroke	26	28

Average latency: 6.65 msec

1.6 Start times

Power-on to Ready (sec)	7 typical
Standby to Ready (sec)	3 typical, 10 max
Idle to Ready (sec)	0.4 max

1.7 Power specifications

The drive receives DC power (+5V) through pin 41 and pin 42 of the AT interface connector.

1.7.1 Power consumption

Power requirements for the drive are listed in the table below. Typical power measurements are based on an average of drives tested under nominal conditions, using 5.0V input voltage at 40°C ambient temperature at sea level. Active mode current and power are measured with a 32-msec delay between each operation and the drive in default logical geometry. Seeking power and currents are measured during one-third-stroke buffered seeks. Read/write power and current are measured with the heads on track, based on a 16-sector write followed by a 32-msec delay, then a 16-sector read followed by a 32-msec delay. Spinup power is measured from time of power-on to time of drive-ready for normal operation.

Mode	**Watts (at nominal voltage)**		**Amps (at nominal voltage)**	
	Typical	**Max**	**Typical**	**Max**
Spinup				
Peak (see Figure 1)	—	—		1.3
Average	3.5	—	0.7	—
Active				
Read/Write	2.5	2.6	0.5	0.52
Seeking	2.5	2.6	0.5	0.52
Idle	1.2	1.3	0.24	0.26
Standby	0.3	0.36	0.06	0.072
Sleep	0.1	0.1	0.02	0.02

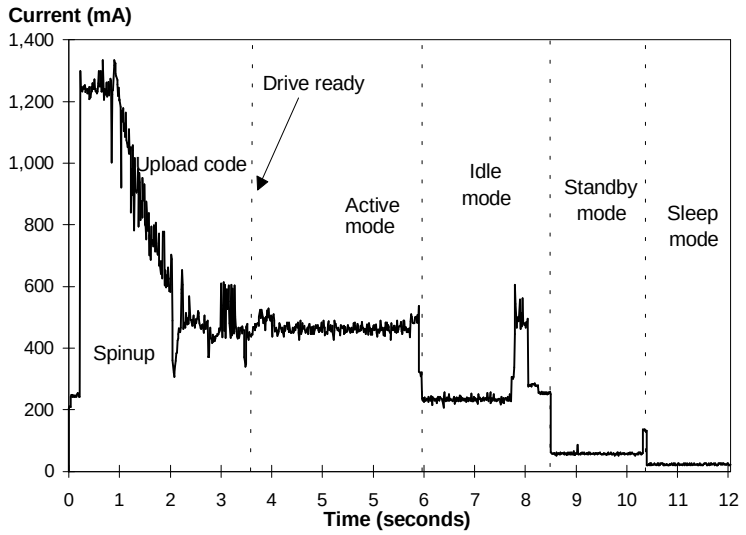

Figure 1. Typical startup and operation current profile

1.7.1.1 Typical current profile

Figure 1 shows a projected drive startup and operation current profile for the Marathon 2250 and the Marathon 1680.

Note. The maximum peak spikes in this profile are the result of inductive kickback from the commutation of the spindle motor and, therefore, do not draw power from the battery. The average peak represents peak power that is drawn from the battery.

1.7.2 Power recovery

Except during execution of a write command or writing cached data, the drive's power can be interrupted without adversely affecting the drive or previously written data. If power is removed while the drive is performing a write operation, the integrity of the data being written cannot be guaranteed.

Note. Do not remove power from the drive while the interface signals are active (at low impedance) because power may enter the input buffers.

1.7.3 Conducted noise

The drive is expected to operate with a maximum of:

- 150 mV peak-to-peak triangular-wave injected noise at the power connector. The frequency is 10 Hz to 100 KHz with equivalent resistive loads.

- 100 mV peak-to-peak triangular-wave injected noise at the power connector. The frequency is 100 KHz to 10 MHz with equivalent resistive loads.

Note. Equivalent resistance (9.26 ohms) is calculated by dividing the nominal voltage (5V) by the typical RMS read/write current (0.54 amps).

1.7.4 Voltage tolerance

Voltage tolerance (including noise): +5 volts, ± 5%

1.7.5 Power-management modes

Seagate's Marathon drives provide programmable power management to enhance battery life and to provide greater energy efficiency. In most computers, you can control power management through the system setup program. These drives feature several power-management modes, which are summarized in the following table and described in more detail below:

Mode	Heads	Spindle	Buffer
Active	Moving	Rotating	Enabled
Idle	Varies	Rotating	Enabled
Standby	Parked	Stopped	Enabled
Sleep	Parked	Stopped	Disabled

Active mode. The drive is in Active mode during the read/write and seek operations.

Idle mode. At power-on, the drive sets the Idle Timer to enter Idle mode after 5 seconds of inactivity. The drive remains in Idle mode with heads flying over the media for 15 minutes; then the drive makes the transition to Active mode and seeks to the last-known logical block address, where it remains for 5 minutes. The drive then seeks to a new, unspecified location two more times, for 5 minutes each, after which it makes the transition to Standby mode. In Idle mode, the spindle remains up to speed, the buffer remains enabled, and the drive accepts all commands and returns to Active mode whenever a disc access command is received.

The drive enters Idle mode when an Idle or Idle Immediate command is received. The Idle or Idle Immediate command overrides the algorithm described above. The drive remains in Idle mode until a disc access command is received or the standby timer expires, whichever occurs first.

When the standby timer expires, the drive makes the transition to the Standby mode. The drive requires approximately 100–200 msec to return to Active mode from Idle mode.

Standby mode. The drive enters Standby mode when the host sends a Standby or Standby Immediate command. If the standby timer has been set by the Standby command, the drive enters Standby mode automatically after the drive has been inactive for the specified length of time. In Standby mode, the buffer remains enabled, the heads are parked and the spindle is at rest. The drive accepts all commands and returns to Active mode any time a disc access command is received. The drive requires approximately 3 seconds to return to Active mode from Standby mode.

Sleep mode. The drive enters Sleep mode only after receiving a Sleep command from the host. The heads are parked and the spindle is at rest. The ROM and RAM codes are valid; however, the cache is flushed before going to sleep. The drive leaves Sleep mode when either a Hard Reset interface signal or a Soft Reset signal (Device Control register=04) is received from the host. After receiving a Soft Reset, the drive exits Sleep mode and enters Standby mode, with all current emulation and translation parameters intact. After receiving a Hard Reset signal, the drive exits Sleep mode and enters Active mode. The drive is reinitialized to the default parameters. This is the same procedure as initial power-on and requires approximately 7 seconds to complete.

Idle and standby timers. The drive sets the default time delay for the idle timer at power-on to 5 seconds. If the idle timer reaches zero before any drive activity is required, the drive makes a transition to Idle mode. Each time the drive performs an Active function (read, write or seek), the idle and standby timers are reinitialized and begin counting down from their specified delay times to zero. If the standby timer has been set and no additional drive activity occurs, the drive remains in Idle mode for the time specified in the standby timer, then enters Standby mode.

If the host has not set the standby timer and no additional drive activity occurs, the drive remains in Idle mode for 30 minutes, then enters standby mode. In both Idle and Standby mode, the drive accepts all commands and returns to Active mode when disc access is necessary.

1.8 Environmental tolerances

1.8.1 Ambient temperature

Operating	5° to 55°C (41° to 131°F)
Nonoperating	–40° to 70°C (–40° to 158°F)

Caution. This drive needs sufficient airflow so that the maximum surface temperature at the center of the top cover of the drive does not exceed 62 degrees C (144 degrees F).

1.8.2 Temperature gradient

Operating	30°C/hr (54°F/hr) max, without condensation
Nonoperating	30°C/hr (54°F/hr) max, without condensation

1.8.3 Humidity

1.8.3.1 Relative Humidity

Operating	8% to 80% noncondensing (10% per hour max)
Storage	8% to 90% noncondensing (10% per hour max)
Transit	5% to 95% noncondensing (10% per hour max)

1.8.3.2 Wet bulb temperature

Operating	29.4°C (85°F) max
Nonoperating	40°C (104°F) max

1.8.4 Altitude

Operating	–300 m to 3,040 m (–1,000 ft to 10,000 ft)
Nonoperating	–300 m to 12,190 m (–1,000 ft to 40,000 ft)

1.8.5 Shock

For shock specifications, it is assumed that the drive is mounted securely with the input levels at the drive mounting screws. For nonoperating specifications, it is assumed that the read/write heads are positioned in the shipping zone.

Note. At power-down, the read/write heads automatically move to the shipping zone. The head and slider assembly park inside of the maximum data cylinder. When power is applied, the heads re-calibrate to Track 0.

1.8.5.1 Operating shock

The Marathon 2250 and the Marathon 1680 incorporate SafeRite shock protection and can withstand a maximum operating shock of 125 Gs without nonrecoverable data errors (based on half-sine shock pulses of 2 msec).

1.8.5.2 Nonoperating shock

The nonoperating shock level that the Marathon 2250 and Marathon 1680 can tolerate without incurring physical damage or degradation in performance is 350 Gs (based on half-sine shock pulses of 2 msec duration) or 150 Gs (based on half-sine shock pulses of 11 msec duration). Shock pulses are defined by MIL-STD-202 F with the amplitude tolerance controlled to ± 5%.

1.8.6 Vibration

For vibration specifications, it is assumed that the drive is mounted in an approved orientation with the input levels at the drive mounting screws. For the nonoperating specifications, it is assumed that the read/write heads are positioned in the shipping zone.

1.8.6.1 Operating vibration

The following table lists the maximum vibration levels that the drive may experience without incurring physical damage, data loss or performance degradation.

5–22 Hz	0.2-inch displacement (peak-to-peak)
22–400 Hz	0.75 Gs acceleration (0 to peak)
400–22 Hz	0.75 Gs acceleration (0 to peak)
22–5 Hz	0.2-inch displacement (peak-to-peak)

1.8.6.2 Nonoperating vibration

The following table lists the maximum nonoperating vibration that the drive may experience without incurring physical damage or degradation in performance.

5–22 Hz	0.2-inch displacement (peak-to-peak)
22–400 Hz	4 Gs acceleration (0 to peak)
400–22 Hz	4 Gs acceleration (0 to peak)
22–5 Hz	0.2-inch displacement (peak-to-peak)

1.9 Drive acoustics

Drive acoustics are measured as sound power, using techniques that are generally consistent with ISO document 7779. Measurements are taken under essentially free-field conditions over a reflecting plane, using a total of nine microphones that measure in the 250–4,000 Hz band. This methodology determines broad-band and narrow-band noise, and discrete frequency components. For all tests, the drive is oriented with the cover facing upward.

Mode	Typical	Maximum
Idle (sound power-bels)	3.5	3.8
Seek (sound power-bels)	3.8	4.1
Idle (sound pressure-dBA)	24	28
Seek (sound pressure-dBA)	26	30

1.10 Reliability

Nonrecoverable read errors	1 per 10^{13} bits read
Mean time between failures (MTBF)	300,000 power-on hours (nominal power, at sea level and 40°C ambient temperature)
Contact start-stop cycles (CSS)	50,000 cycles (at nominal voltage and 40°C, with 60 cycles per hour and a 50% duty cycle)
Preventive maintenance	None required
Service life	5 years

1.11 Agency certification

1.11.1 Safety certification

The drive is recognized in accordance with UL 1950 and CSA C22.2 (950-M89) and meets all applicable sections of IEC 380, IEC 435, IEC 950, VDE 0806/08.81 and EN 60950 as tested by TUV-Rheinland, North America.

1.11.2 Electromagnetic Compatibility

Hard drives that display the CE marking comply with European Union requirements specified in Electromagnetic Compatibility Directive 89/336/EEC as amended by Directive 92/31/EEC of 28 April 1992 and Directive 93/68/EEC of 22 July 1993.

Seagate uses an independent laboratory to confirm compliance with the EC directives specified in the previous paragraph. Drives are tested in representative end-user systems using 80486, Pentium and PowerPC microprocessors. Although CE-marked Seagate drives comply with the directives when used in the test systems, we cannot guarantee that all systems will comply with the directives. The drive is designed for operation inside a properly designed enclosure, with properly shielded I/O cable (if necessary) and terminators on all unused I/O ports. The computer manufacturer or system integrator should confirm EMC compliance and provide CE marking for their products.

1.11.3 FCC verification

These drives are intended to be contained solely within a personal computer or similar enclosure, not attached as an external device. As such, each drive is considered to be a subassembly even when it is sold individually to the customer. As a subassembly, no Federal Communications Commission verification or certification of the device is required.

Seagate Technology, Inc. has tested this device in enclosures as described above to ensure that the total assembly (enclosure, disc drive, motherboard, power supply, etc.) complies with the limits for a Class B computing device, pursuant to Subpart J, Part 15 of the FCC rules. Operation with noncertified assemblies is likely to result in interference with radio and television reception.

Radio and Television Interference. This equipment generates and uses radio frequency energy and, if not installed and used in strict accordance with the manufacturer's instructions, may cause interference with radio and television reception.

This equipment is designed to provide reasonable protection against such interference in a residential installation. However, there is no guarantee that interference will not occur in a particular installation. If this equipment does cause interference with radio or television reception (which can be determined by turning the equipment on and off), try one or more of the following corrective measures:

- Reorient the receiving antenna.
- Move the device to one side or the other of the radio or TV.
- Move the device farther away from the radio or TV.
- Plug the computer into a different outlet so that the receiver and computer are on different branch outlets.

If necessary, you should consult your dealer or an experienced radio or television technician for additional suggestions. You may find the following booklet from the Federal Communications Commission helpful: *How to Identify and Resolve Radio-Television Interference Problems*. This booklet is available from the Superintendent of Documents, U.S. Government Printing Office, Washington, DC 20402. Refer to publication number 004-000-00345-4.

2.0 Drive mounting and configuration

2.1 Handling and static-discharge precautions

After unpacking, but before installation, the drive may be exposed to potential handling and ESD hazards. You must observe standard static-discharge precautions. A grounded wrist-strap is recommended.

Handle the drive only by the sides of the head/disc assembly. Avoid contact with the printed circuit board, all electronic components and the interface connector. Do not apply pressure to the top cover. Always rest the drive on a padded antistatic surface until you mount it in the host system.

2.2 Jumper settings

2.2.1 Master/slave configuration

You must establish a master/slave relationship between two drives that are attached to a single AT bus. You can configure a drive to become a master or slave by setting the master/slave jumpers, as described below and shown in Figure 2 on page 18.

Alternatively, you can configure the drive as a master or slave using the cable-select option. This requires a special daisy-chain cable that grounds pin 28 (CSEL) on one of its two drive connectors. If you attach the drive to the grounded CSEL connector, it becomes a master. If you attach the drive to the ungrounded CSEL connector, it becomes a slave. To use this option, the host system and both drives must support cable-select and both drives must be configured for cable-select. To configure Marathon drives for cable-select, install both master/slave jumpers.

For the host to recognize the slave drive using the DASP– signal, the slave drive must assert the DASP– signal at power-up, and the master drive must monitor DASP– at power-up.

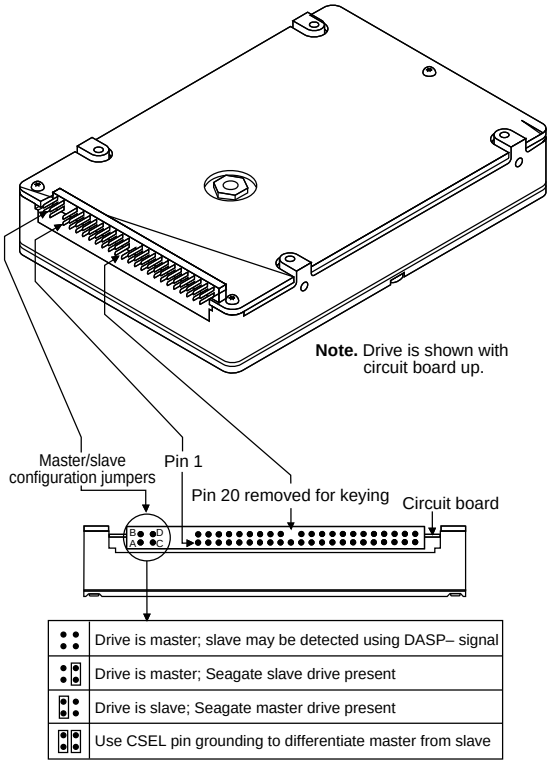

Figure 2. Connector and master/slave jumper setup

Jumper for pins A and B	Jumper for pins C and D	Configuration
Off	Off	Drive is master; slave drive may be detected using DASP– signal. CSEL is ignored.
Off	On	Drive is master; slave drive is present. CSEL is ignored. DASP– is ignored.
On	Off	Drive is slave (a master drive should be present also). CSEL is ignored.
On	On	Differentiate master and slave drives using cable-select: If a drive is attached to a connector in which pin 28 is grounded, then it becomes a master. If a drive is attached to a connector in which pin 28 is ungrounded, then it becomes a slave.

2.3 Remote LED configuration

The drive indicates activity to the host through the DASP– line (pin 39) on the ATA interface. This line may be connected to a drive status indicator driving an LED at 5V. The line has a 30 mA nominal current limit. Most external LEDs are sufficiently bright at 15 mA, however. Because the LED drops 1.7 volts, we recommend that you place a 200-ohm resistor in series with the LED to limit the current to 15 mA.

2.4 Drive mounting

You can mount the drive in any orientation using four screws in the four side-mounting or four bottom-mounting holes. Allow a minimum clearance of 0.030 inches (0.76 mm) for cooling around the entire perimeter of the drive. The drive conforms to the industry-standard SFF-8200 mounting specifications and requires the use of SFF-8200-compatible connectors in direct-mounting applications. See Figures 3 and 4 on pages 20 and 21 for drive mounting dimensions.

Note. Per SFF 8004 specifications, the I/O connector pins may extend up to 0.015 inches beyond the edge of the head/disc assembly.

Caution. This drive needs sufficient airflow so that the maximum surface temperature at the center of the top cover of the drive does not exceed 62°C (144°F).

Caution. To avoid damaging the drive, use M3X0.5 metric mounting screws only. Do not insert mounting screws more than 0.150 inches (3.81 mm) into the mounting holes. Do not overtighten the screws (maximum torque: 3 inch-lb).

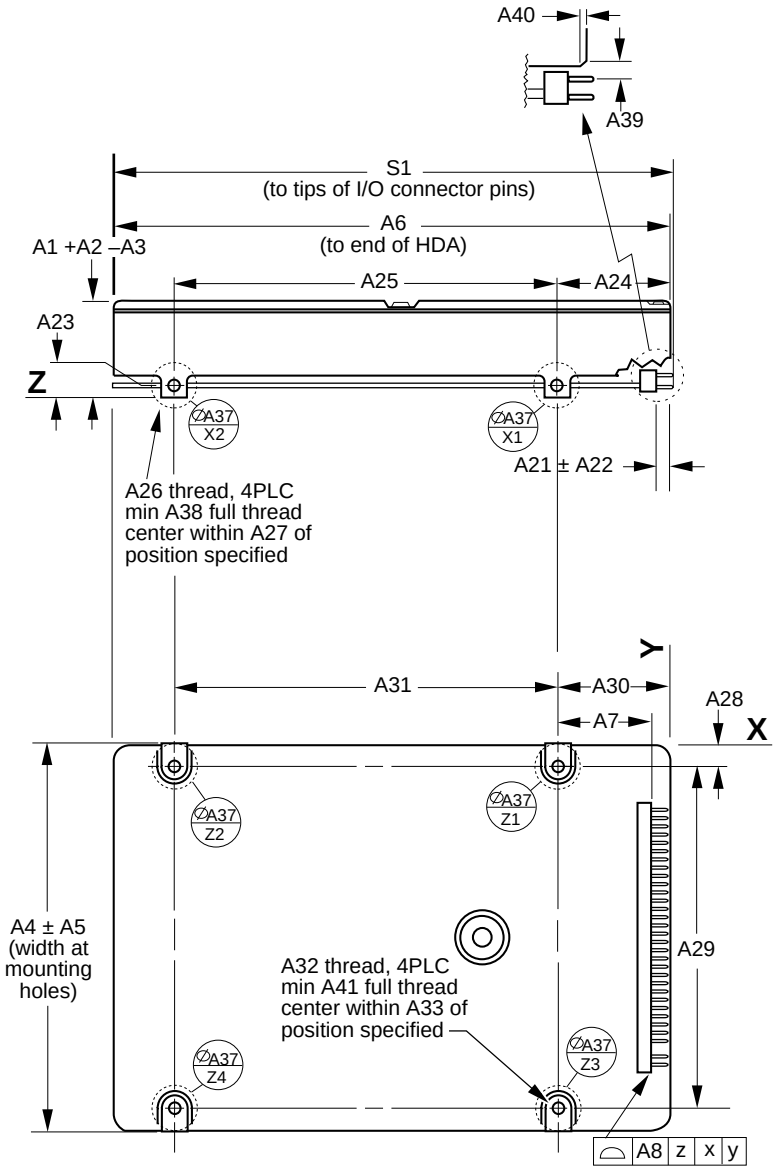

Figure 3. Drive mounting dimensions—side and bottom view (for dimension specifications, see table on pages 21 and 22).

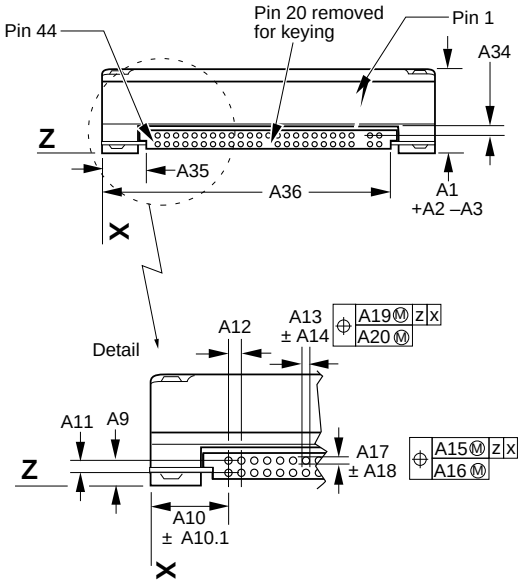

Figure 4. Drive mounting dimensions—end view (for dimension specifications, see table below).

Mounting dimension specifications			
Dim.	**Description**	**inches**	**mm**
A1	Drive height	0.668	16.97
A2	+ tolerance on drive height	0.008	0.20
A3	– tolerance on drive height	0.008	0.20
A4	Drive width at mounting holes	2.750	69.85
A5	+ and – tolerance on drive width at mounting holes	0.009	0.23
A6	Maximum drive length (not including I/O pins)	3.955	100.45
A7	Front-to-back connector location	0.403	10.2
A8	Allowable range, front-to-back connector location	0.039	1.00
A9	Top-to-bottom connector location, pin center line	0.157	3.99
A10	Side-to-side connector location, pin center line	0.399	10.14
A10.1	+ and – tolerance, side-to-side connector location	0.015	0.38
A11	Top-to-bottom pin spacing	0.079	2.00
A12	Side-to-side pin spacing	0.079	2.00
A13	Pin side-to-side dimension	0.020	0.50
A14	+ and – tolerance on pin side-to-side dimension	0.002	0.05
A15	Allowable range, side-to-side connector location	0.030	0.75

continued on following page

continued from previous page

Mounting dimension specifications			
Dim.	**Description**	**inches**	**mm**
A16	Allowable range, side-to-side, pins within connector	0.003	0.08
A17	Pin top-to-bottom dimension	0.020	0.50
A18	+ and – tolerance on pin top-to-bottom dimension	0.002	0.05
A19	Allowable range, top-to-bottom connector location	0.020	0.50
A20	Allowable range, top-to-bottom, pins in connector	0.003	0.08
A21	Connector pin length	0.152	3.86
A22	+ and – tolerance on pin length	0.008	0.20
A23	Side mounting hole height	0.118	3.00
A24	Front-to-back location of side mounting holes	0.551	14.0
A25	Front-to-back distance between side mounting holes	3.016	76.6
A26	Thread description, side mounting holes	n/a	M3
A27	Diam. of cyl. into which hole center must fall	0.020	0.50
A28	Distance between side of drive and center of nearest bottom mounting holes (on pin-44 side)	0.160	4.06
A29	Side-to-side distance between bottom mounting holes	2.430	61.72
A30	Front-to-back location of bottom mounting holes	0.551	14.0
A31	Front-to-back distance between bottom mounting holes	3.016	76.6
A32	Thread description, bottom mounting holes	n/a	M3
A33	Diam. of cyl. into which hole center must fall	0.020	0.50
A34	Min. vertical clearance for mating connector	0.039	1.00
A35	Max. side-to-side distance from pin-44 edge of HDA near I/O connector to start of clearance for mating connector	0.315	8.00
A36	Min. side-to-side clearance from pin-44 edge of I/O connector to any object interrupting clearance of mating connector	2.370	60.20
A37	Diam. of datum targets and reference areas	0.315	8.00
A38	Min. thread depth, side mounting holes	0.118	3.00
A39	Min. pin centerline to chamfer above connector	0.049	1.25
A40	Min. chamfer above connector	0.010	0.25
A41	Min. thread depth, bottom mounting holes	0.098	2.50
S1	Maximum drive length to tips of I/O pins (Non-SFF dimension—for reference only)	3.970	100.84

2.5 ATA interface connector

The drive connector is a 44-conductor connector with 2 rows of 22 male pins on 0.079-inch (2 mm) centers (see Figure 4 on page 21 and Figure 5). The mating cable connector is a 44-conductor, nonshielded connector with 2 rows of 22 female contacts on 0.079-inch (2 mm) centers. The connectors should provide strain relief and should be keyed with a plug in place of pin 20.

These drives are designed to support the industry-standard SFF-8200 mounting specifications. When installing these drives in fixed mounting applications, use only SFF-compatible connectors such as Molex part number 87368-442*x*. For applications that involve flexible cables or printed circuit cables (PCCs), use Molex part number 87259-4413 or equivalent to connect the drive to the system. Select a connector that provides adequate clearance for the master/slave configuration jumpers if the application requires the use of such jumpers. The ATA interface cable should be no more than 18 inches long.

Note. Per SFF 8004 specifications, the I/O connector pins may extend up to 0.015 inches beyond the edge of the head/disc assembly.

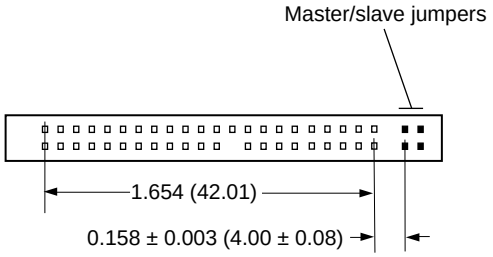

Dimensions are in inches (mm)

Figure 5. ATA Interface connector dimensions (non-SFF dimension, for reference only)

3.0 ATA Attachment-3 Interface (ATA-3)

The drives in this manual comply with the ATA-3 Standard, proposed by the X3T10 committee, a Technical Committee of Accredited Standards Committee X3, of the American National Standards Institute (ANSI).

The X3T10 committee has been renamed to X3T13 to reflect its current standards work. For more information about the committee and the standards, see the committee's Internet FTP site:

ftp://fission.dt.wdc.com/pub/standards/X3T13T

3.1 ATA interface signals and connector pins

Figure 6 on page 26 summarizes the signals on the ATA interface connector that the drive supports. For a detailed description of these signals, refer to the *Working Draft of the Proposed American National Standard X3T10/2008D Revision 6, Information Technology AT Attachment-3 Interface (ATA-3),* subsequently referred to as the *Draft Proposed ATA-3 Standard.*

3.1.1 AT bus signal levels

Signals that the drive sends have the following output characteristics at the drive connector:

Logic Low	0.0V to 0.4V
Logic High	2.5V to 5.25V

Signals that the drive receives must have the following input characteristics, measured at the drive connector:

Logic Low	0.0V to 0.8V
Logic High	2.0V to 5.25V

Drive pin #	Signal name	Host pin # and signal description	
1	Reset–	1	Host Reset
2	Ground	2	Ground
3	DD7	3	Host Data Bus Bit 7
4	DD8	4	Host Data Bus Bit 8
5	DD6	5	Host Data Bus Bit 6
6	DD9	6	Host Data Bus Bit 9
7	DD5	7	Host Data Bus Bit 5
8	DD10	8	Host Data Bus Bit 10
9	DD4	9	Host Data Bus Bit 4
10	DD11	10	Host Data Bus Bit 11
11	DD3	11	Host Data Bus Bit 3
12	DD12	12	Host Data Bus Bit 12
13	DD2	13	Host Data Bus Bit 2
14	DD13	14	Host Data Bus Bit 13
15	DD1	15	Host Data Bus Bit 1
16	DD14	16	Host Data Bus Bit 14
17	DD0	17	Host Data Bus Bit 0
18	DD15	18	Host Data Bus Bit 15
19	Ground	19	Ground
20	(removed)	20	(No Pin)
21	DMARQ	21	DMA Request
22	Ground	22	Ground
23	DIOW–	23	Host I/O Write
24	Ground	24	Ground
25	DIOR–	25	Host I/O Read
26	Ground	26	Ground
27	IORDY	27	I/O Channel Ready
28	CSEL	28	Cable Select pin
29	DMACK–	29	DMA Acknowledge
30	Ground	30	Ground
31	INTRQ	31	Host Interrupt Request
32	IOCS16–	32	Host 16 Bit I/O
33	DA1	33	Host Address Bus Bit 1
34	PDIAG–	34	Passed Diagnostics
35	DA0	35	Host Address Bus Bit 0
36	DA2	36	Host Address Bus Bit 2
37	CS1FX–	37	Host Chip Select 0
38	CS3FX–	38	Host Chip Select 1
39	DASP–	39	Drive Active / Slave Present
40	Ground	40	Ground
41	Power	41	+5 volts DC (logic)
42	Power	42	+5 volts DC (motor)
43	Ground	43	Ground for power pins
44	Reserved	44	Reserved

Pins 28, 34 and 39 are used for master-slave communication (details shown below).

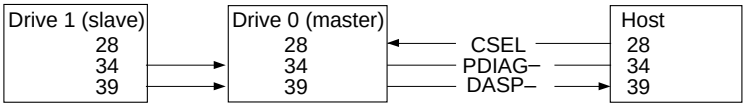

Figure 6. I/O pins and supported ATA signals

3.2 ATA Interface commands

3.2.1 Supported ATA commands

The following table lists supported ATA-standard and Seagate-specific drive commands. For a detailed description of the ATA commands, refer to the *Draft Proposed ATA-3 Standard.* See Section 3.2.4 on page 33 for details and subcommands used in the S.M.A.R.T. implementation.

Command name	Command code	Supported by Marathon 2250 and Marathon 1680
ATA-standard commands		
Execute Drive Diagnostics	90_H	Yes
Format Track	50_H	Yes
Identify Drive	EC_H	Yes
Initialize Drive Parameters	91_H	Yes
NOP	00_H	No
Read Buffer	$E4_H$	Yes
Read DMA (w/retry)	$C8_H$	Yes
Read DMA (no retry)	$C9_H$	Yes
Read Long (w/retry)	22_H	Yes
Read Long (no retry)	23_H	Yes
Read Multiple	$C4_H$	Yes
Read Sectors (w/retry)	20_H	Yes
Read Sectors (no retry)	21_H	Yes
Read Verify Sectors (w/retry)	40_H	Yes
Read Verify Sectors (no retry)	41_H	Yes
Recalibrate	10_H	Yes
Seek	70_H	Yes
Set Features	EF_H	Yes
Set Multiple Mode	$C6_H$	Yes

continued on following page

continued from previous page

Command name	Command code	Supported by Marathon 2250 and Marathon 1680
Execute S.M.A.R.T Command	$B0_H$	Yes
Write Buffer	$E8_H$	Yes
Write DMA (w/retry)	CA_H	Yes
Write DMA (no retry)	CB_H	Yes
Write Long (w/retry)	32_H	Yes
Write Long (no retry)	33_H	Yes
Write Multiple	$C5_H$	Yes
Write Same	$E9_H$	No
Write Sectors (w/retry)	30_H	Yes
Write Sectors (no retry)	31_H	Yes
Write Verify	$3C_H$	No
Drive Security Commands		
Security Set Password	F1H	Yes
Security Unlock	$F2_H$	Yes
Security Erase Prepare	$F3_H$	Yes
Security Erase Unit	$F4_H$	Yes
Security Freeze Lock	$F5_H$	Yes
Security Disable Password	$F6_H$	Yes
ATA-standard power-management commands		
Check Power Mode	98_H or $E5_H$	Yes
Idle	97_H or $E3_H$	Yes
Idle Immediate	95_H or $E1_H$	Yes
Sleep	99_H or $E6_H$	Yes
Standby	96_H or $E2_H$	Yes
Standby Immediate	94_H or $E0_H$	Yes

The following commands contain drive-specific features that may not be described in the *Draft Proposed ATA-3 Standard*.

3.2.2 Identify Drive command

The Identify Drive command (command code EC_H) transfers information about the drive to the host following power-up. The data is organized as a single 512-byte block of data, the contents of which are shown in the table below. All reserved bits or words should be set to zero. Parameters listed with an "*x*" are drive-specific or vary with the state of the drive. See Section 1 of this manual for default parameter settings for the Marathon 2250 and the Marathon 1680.

Word	Description	Contents
0	Configuration information: Bit 6: fixed drive	0040_H
1	Number of fixed cylinders (default logical emulation): 4,360 (ST92255AG); 3,256 (ST91685AG)	1108_H (ST92255AG) $0CB8_H$ (ST91685AG)
2	ATA-reserved	0000_H
3	Number of heads (default logical emulation): 16	0010_H
4	ATA-obsolete	0000_H
5	ATA-obsolete	0000_H
6	Number of sectors per track (default logical emulation): 63	$003F_H$
7–9	Not used by this drive	0000_H
10–19	Serial number: (20 ASCII characters, 0000_H = none)	ASCII
20	ATA-obsolete	0000_H
21	ATA-obsolete	0000_H
22	Number of ECC bytes available (16)	0010_H
23–26	Firmware revision (8 ASCII character string): *xx* = ROM version, *ss* = RAM version, *tt*= RAM version	xx.ss.tt

continued on following page

continued from previous page

Word	Description	Contents
27–46	Drive model number: (40 ASCII characters, padded with blanks to end of string)	ST92255AG or ST91685AG
47	Maximum sectors per interrupt on read/write multiple	0010_H
48	Double word I/O (not supported)	0000_H
49	Standby timer values supported per ATA standard, IORDY supported, IORDY can be disabled	$2C00_H$
50	ATA-reserved	0000_H
51	PIO data-transfer cycle timing mode	0200_H
52	DMA transfer cycle timing mode (not used)	0000_H
53	Validity of words 54–58 and words 64–70 (words may be valid)	0003_H
54	Number of cylinders (current emulation mode)	$xxxx_H$
55	Number of heads (current emulation mode)	$xxxx_H$
56	Number of sectors per track (current emulation mode)	$xxxx_H$
57–58	Number of sectors (current emulation mode)	$xxxx_H$
59	Number of sectors transferred during a Read Multiple or Write Multiple command	$01xx_H$
60–61	LBA sectors available	(ST92255AG) 0FBC 0043H (ST91685AG) 017FC 0032H
62	ATA obsolete	0000_H
63	Multiword DMA active/modes supported (see note following)	$0x07_H$
64	Advanced PIO modes supported (modes 3 and 4 supported)	0003_H

Word	Description	Contents
65	Minimum multiword DMA transfer cycle time per word (120 nsec)	0078_H
66	Recommended multiword DMA transfer cycle time per word (180 nsec)	0078_H
67	Minimum PIO cycle time without IORDY flow control (363 nsec)	$016B_H$
68	Minimum PIO cycle time with IORDY flow control (120 nsec)	0078_H
69–127	ATA-reserved	0000_H
128–159	Seagate-reserved	$xxxx_H$
160–255	ATA-reserved	0000_H

Note. The following DMA mode settings are used in word 63 of the Identify Drive command:

Word	Bit	Description (if bit is set to 1)
63	0	Multiword DMA mode 0 available
63	1	Multiword DMA mode 1 available
63	2	Multiword DMA mode 2 available
63	8	Multiword DMA mode 0 currently active
63	9	Multiword DMA mode 1 currently active
63	10	Multiword DMA mode 2 currently active

3.2.3 Set Features command

This command controls the implementation of various features that the drive supports. When the drive receives this command, it sets BSY, checks the contents of the Features register, clears BSY and generates an interrupt. If the value in the register does not represent a feature that the drive supports, the command is aborted. Power-on default has the read look-ahead and write caching features enabled and 4 bytes of ECC. The acceptable values for the Features register are defined as follows:

01_H Obsolete

02_H Enable write cache *(default)*

03_H Set transfer mode (based on value in Sector Count register)
Sector Count register values:

- 00_H Set PIO mode to default (PIO mode 2), enable IORDY
- 01_H Set PIO mode to default (PIO mode 2), disable IORDY
- 08_H PIO Mode 0
- 09_H PIO Mode 1
- $0A_H$ PIO Mode 2 *(default)*
- $0B_H$ PIO Mode 3
- $0C_H$ PIO Mode 4
- 10_H Obsolete
- 11_H Obsolete
- 12_H Obsolete
- 20_H Multiword DMA Mode 0
- 21_H Multiword DMA Mode 1
- 22_H Multiword DMA Mode 2

04_H Enable auto-read reassignment *(default)*

33_H Not implemented

44_H Sixteen bytes of ECC apply on read long and write long commands

54_H Not implemented

55_H Disable read look-ahead (read cache) feature

66_H Disable reverting to power-on defaults

77_H Not implemented

81_H Obsolete

82_H Disable write cache

84_H Not implemented

88_H Not implemented

99_H	Not implemented
$9A_H$	Not implemented
AA_H	Enable read look-ahead (read cache) feature *(default)*
AB_H	Not implemented
BB_H	4 bytes of ECC apply on read long and write long commands *(default)*
CC_H	Enable reverting to power-on defaults *(default)*

At power-on or after a hardware reset, the default values of the features are as indicated above. A software reset also changes the features to default values unless a 66_H command has been received.

3.2.4 S.M.A.R.T. commands

Self-Monitoring, Analysis and Reporting Technology (S.M.A.R.T.) is an emerging technology that provides near-term failure prediction for disc drives. When S.M.A.R.T. is enabled, the Seagate drive monitors predetermined drive attributes that are susceptible to degradation over time. If self-monitoring determines that a failure is likely, S.M.A.R.T. makes a status report available so that the host can prompt the user to back up data on the drive. Not all failures are predictable. S.M.A.R.T. predictability is limited to only those attributes the drive can monitor. For more information on S.M.A.R.T. commands and implementation, see the *Working Draft of the Proposed American National Standard X3T10/2008D Revision 6, Information Technology AT Attachment-3 Interface (ATA-3)*. Refer to Section 3.0

This drive is shipped with S.M.A.R.T. features disabled. You must have a recent BIOS or software package that supports S.M.A.R.T. to enable the feature. The table below shows the S.M.A.R.T. command codes that these drives use.

Before executing a S.M.A.R.T. command by writing $B0_H$ to the Command Register, the host must do the following:

- Write the value $4F_H$ to Cylinder_Low register.
- Write the value $C2_H$ to the Cylinder_High register.
- Write the appropriate S.M.A.R.T. code to the Features register, as shown in the table below:

Code in Features Register	**S.M.A.R.T. Command**	**Supported by Marathon 2250 and Marathon 1680**
$D8_H$	Enable S.M.A.R.T. Operations	Yes
$D9_H$	Disable S.M.A.R.T. Operations	Yes
DA_H	Return S.M.A.R.T. Status	Yes

Note. If an appropriate code is not written to the Features Register, the command will be aborted and 0*x*04 (abort) will be written to the Error register.

3.2.5 Drive Security Commands

The drive security commands provide a password-based security system to prevent unauthorized access to a disc drive.

During manufacturing, the master password, SEAGATE, is set for the drive, and the lock function is disabled. The system manufacturer or dealer may set a new master password using the Security Set Password command ($F1_H$), without enabling the lock function. Before a user password is entered, the drive rejects all security commands except Security Set Password.

When the user sets a password, the drive automatically enters lock mode (lock mode is enabled) the next time it is powered on. When lock mode is enabled, the drive rejects all media-access commands until the user enters the correct user password, completing a Security Unlock command.

The drive supports two levels of security: high security and maximum security. In high-security mode, if you forget your password, you can still access the data by entering the master password. In maximum-security mode, if you forget your password, you cannot access the data. However, in maximum-security mode, you can erase all data on the drive and reinitialize the drive using the Erase Unit command ($F4_H$). You must enter the master password to complete an Erase Unit command.

The Freeze Lock command ($F5_H$) prevents you from changing security features. If, during normal drive operation, the Freeze Lock command is executed, all normal drive commands are implemented, but the security commands Disable Password, Erase Unit, Set Password and Unlock cannot be completed.

See the ATA-3 specification (Document X3T10/2008D) for additional details on the Drive Security Commands.

Appendix. Compatibility Notes

ECC testing

When a Marathon 2250 or Marathon 1680 performs hardware-based ECC error correction on-the-fly, the drive does not report an ECC error. This allows ECC correction without degrading drive performance. Some older drive diagnostic programs test ECC features by creating small data errors and then checking to see if they are reported. Such tests, when run on these drives, may incorrectly report an ECC detection failure, because the drive hardware corrects the data automatically, avoiding the error rather than reporting it. Such a report does not indicate a drive malfunction.

Seagate Technology, Inc.
920 Disc Drive, Scotts Valley, California 95066, USA

Publication Number: 36337-101, Rev. A, Printed in USA