Seagate

Barracuda 36ES2 Family:

ST336918N

ST336938LW

ST318418N

ST318438LW

Product Manual, Volume 1

Barracuda 36ES2 Family:

ST336918N

ST336938LW

ST318418N

ST318438LW

Product Manual, Volume 1

BARRACUDA

© 2002 Seagate Technology LLC All rights reserved
Publication number: 100182971, Rev. A
January 2002

Seagate, Seagate Technology, and the Seagate logo are registered trademarks of Seagate Technology LLC. Barracuda, SeaFAX, SeaFONE, SeaBOARD, and SeaTDD are either registered trademarks or trademarks of Seagate Technology LLC. Other product names are registered trademarks or trademarks of their owners.

Seagate reserves the right to change, without notice, product offerings or specifications. No part of this publication may be reproduced in any form without written permission of Seagate Technology LLC.

Revision status summary sheet

Revision	Date	Writer/Engineer	Sheets Affected
Rev. A	01/02/2002	K. Schweiss/B. Hohn	1/1, v thru ix, 1-84.

!

Notice.

Product Manual 100182971 is Volume 1 of a two-volume document with the SCSI interface information in the SCSI Interface Product Manual, Volume 2, part number 75789509.

If you need the SCSI interface information, order the SCSI Interface Product Manual, Volume 2, part number 75789509.

Contents

1.0 Scope . . . 1

2.0 Applicable standards and reference documentation. . . . 3

2.1 Standards . . . 3
2.1.1 Electromagnetic compatibility . . . 3
2.1.2 Electromagnetic susceptibility. . . . 3
2.2 Electromagnetic compliance . . . 3
2.3 Reference documents . . . 4

3.0 General description. . . . 5

3.1 Standard features. . . . 6
3.2 Media characteristics . . . 6
3.3 Performance. . . . 6
3.4 Reliability . . . 6
3.5 Unformatted and formatted capacities . . . 7
3.6 Programmable drive capacity. . . . 7
3.7 Factory installed accessories . . . 7
3.8 Options (factory installed). . . . 7

4.0 Performance characteristics . . . 8

4.1 Internal drive characteristics (transparent to user) . . . 8
4.2 SCSI performance characteristics (visible to user) . . . 8
4.2.1 Access time [5] . . . 8
4.2.2 Format command execution time (minutes) [1] . . . 8
4.2.3 Generalized performance characteristics . . . 8
4.3 Start/stop time . . . 9
4.4 Prefetch/multi-segmented cache control . . . 9
4.5 Cache operation . . . 10
4.5.1 Caching write data . . . 10
4.5.2 Prefetch operation . . . 11

5.0 Reliability specifications . . . 13

5.1 Error rates . . . 13
5.1.1 Environmental interference. . . . 13
5.1.2 Read errors. . . . 13
5.1.3 Write errors . . . 13
5.1.4 Seek errors . . . 13
5.2 Reliability and service. . . . 14
5.2.1 Mean time between failure . . . 14
5.2.2 Preventive maintenance . . . 14
5.2.3 Service life . . . 14
5.2.4 Service philosophy . . . 14
5.2.5 Service tools . . . 14
5.2.6 Hot plugging Barracuda 36ES2 disc drives . . . 15
5.2.7 S.M.A.R.T. . . . 15
5.2.8 Drive Self Test (DST) . . . 16
5.2.8.1 DST Failure Definition . . . 17
5.2.8.2 Implementation . . . 17
5.2.9 Product warranty. . . . 18

6.0 Physical/electrical specifications . . . 21

6.1 AC power requirements . . . 21
6.2 DC power requirements . . . 21
6.2.1 Conducted noise immunity . . . 22
6.2.2 Power sequencing . . . 22
6.2.3 12 V - Current profile . . . 22
6.3 Power dissipation . . . 24
6.4 Environmental limits . . . 26

6.4.1 Temperature 26
6.4.2 Relative humidity 27
6.4.3 Effective altitude (sea level) 27
6.4.4 Shock and vibration 27
6.4.4.1 Shock 27
6.4.4.2 Vibration 29
6.4.5 Air cleanliness 29
6.4.6 Acoustics 29
6.4.7 Electromagnetic susceptibility 29
6.5 Mechanical specifications 30

7.0 Defect and error management 33
7.1 Drive internal defects 33
7.2 Drive error recovery procedures 33
7.3 SCSI systems errors 34

8.0 Installation 35
8.1 Drive ID/option select header 35
8.1.1 Notes for Figures 14 through 18 40
8.1.2 Function description 41
8.1.3 Drive orientation 42
8.2 Cooling 42
8.2.1 Air flow 42
8.3 Drive mounting 43
8.4 Grounding 43

9.0 Interface requirements 45
9.1 General description 45
9.2 SCSI interface messages supported 45
9.3 SCSI interface commands supported 46
9.3.1 Inquiry Vital Product data 50
9.3.2 Mode Sense data 52
9.4 SCSI bus conditions and miscellaneous features supported 55
9.5 Synchronous data transfer 57
9.5.1 Synchronous data transfer periods supported 57
9.5.2 REQ/ACK offset 57
9.6 Physical interface 57
9.6.1 DC cable and connector 57
9.6.2 SCSI interface physical description 60
9.6.3 SCSI interface cable requirements 60
9.6.4 Mating connectors 61
9.6.4.1 Mating connectors for N model drives 61
9.6.4.2 Mating connectors for LW model drives 63
9.7 Electrical description 68
9.7.1 Multimode—SE and LVD alternatives 68
9.7.1.1 Single-ended drivers/receivers for N models 70
9.7.1.2 Single-ended drivers/receivers for LW models 70
9.7.1.3 Low voltage differential I/O circuits 71
9.7.1.4 General cable characteristics 71
9.8 Terminator requirements 72
9.9 Terminator power 72
9.10 Disc drive SCSI timing 73
9.11 Drive activity LED 74

10.0 Seagate Technology support services 75

List of Figures

Figure 1. Barracuda 36ES2 family drive (ST336938LW shown) 1
Figure 2. Typical ST336938/ST336918/ST318438/ST318418 drive +12 V current profile 22
Figure 3. Typical ST336938/ST336918/ST318438/ST318418 drive +5 V current profile 23
Figure 4. ST336938/ST318438 DC current and power vs. input/output operations per second (LVD) . . . 24
Figure 5. ST336918/ST318418 DC current and power vs. input/output operations per second (SE) 25
Figure 6. Location of HDA Temperature Check Point 26
Figure 7. Recommended mounting 28
Figure 8. LW mounting configuration dimensions 30
Figure 9. N mounting configuration dimensions 31
Figure 10. J6 jumper header for LW models 36
Figure 11. J6 jumper header for N model 37
Figure 12. J5 jumper header (on LW models only) 38
Figure 13. J2 option select header (for LW models) 39
Figure 14. J2 option select header (for N models) 39
Figure 15. Air flow (suggested) 42
Figure 16. N model drive physical interface (50-pin SCSI I/O connector) 58
Figure 17. LW model drive physical interface (68-pin J1 SCSI I/O connector) 59
Figure 18. Nonshielded 50-pin SCSI device connector used on N drives 61
Figure 19. SCSI daisy chain interface cabling for N drives 62
Figure 20. Nonshielded 68 pin SCSI device connector used on LW drives 63
Figure 21. SCSI daisy chain interface cabling for LW drives 64
Figure 22. LVD output signals 69
Figure 23. Typical SE-LVD alternative transmitter receiver circuits 69
Figure 24. Single-ended transmitters and receivers on N models 70

1.0 Scope

This manual describes Seagate Technology® LLC Barracuda® 36ES2 disc drives.

Barracuda 36ES2 drives support the Small Computer System Interface (SCSI) as described in the ANSI SCSI interface specifications to the extent described in this manual. The *SCSI Interface Product Manual*, part number 75789509, describes general SCSI interface characteristics of this and other families of Seagate drives. The *SCSI Interface Product Manual* references information from the documents listed in Section 2.3.

From this point on in this product manual the reference to Barracuda 36ES2 models is referred to as “the drive” unless references to individual models are necessary.

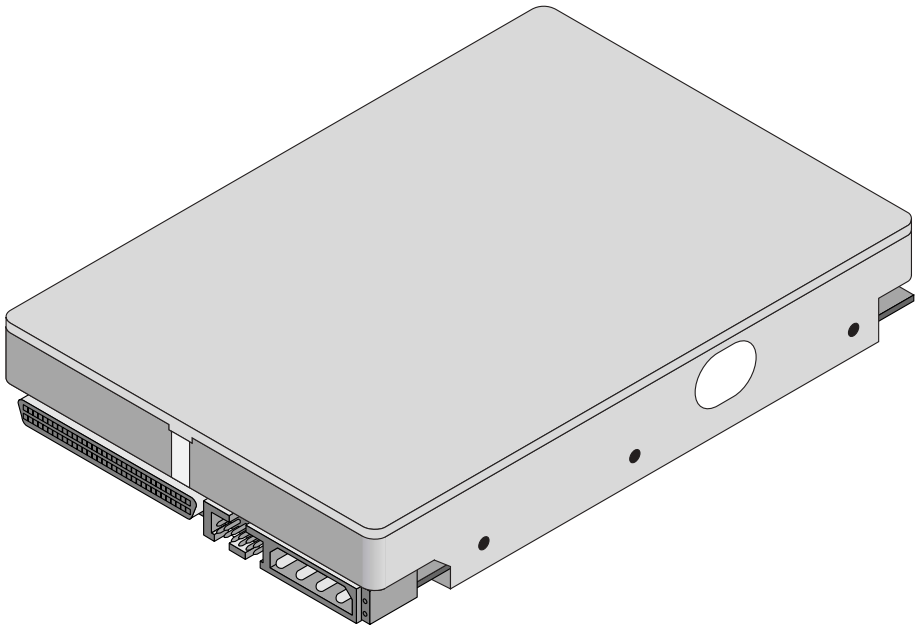

Figure 1. Barracuda 36ES2 family drive (ST336938LW shown)

2.0 Applicable standards and reference documentation

The drive has been developed as a system peripheral to the highest standards of design and construction. The drive depends upon its host equipment to provide adequate power and environment in order to achieve optimum performance and compliance with applicable industry and governmental regulations. Special attention must be given in the areas of safety, power distribution, shielding, audible noise control, and temperature regulation. In particular, the drive must be securely mounted in order to guarantee the specified performance characteristics. Mounting by bottom holes must meet the requirements of Section 8.3.

2.1 Standards

The Barracuda 36ES2 family complies with Seagate standards as noted in the appropriate sections of this Manual and the Seagate *SCSI Interface Product Manual*, part number 75789509.

The Barracuda 36ES2 disc drive is a UL recognized component per UL1950, CSA certified to CSA C22.2 No. 950-95, and VDE certified to VDE 0805 and EN60950.

2.1.1 Electromagnetic compatibility

The drive, as delivered, is designed for system integration and installation into a suitable enclosure prior to use. As such the drive is supplied as a subassembly and is not subject to Subpart B of Part 15 of the FCC Rules and Regulations nor the Radio Interference Regulations of the Canadian Department of Communications.

The design characteristics of the drive serve to minimize radiation when installed in an enclosure that provides reasonable shielding. As such, the drive is capable of meeting the Class B limits of the FCC Rules and Regulations of the Canadian Department of Communications when properly packaged. However, it is the user's responsibility to assure that the drive meets the appropriate EMI requirements in their system. Shielded I/O cables may be required if the enclosure does not provide adequate shielding. If the I/O cables are external to the enclosure, shielded cables should be used, with the shields grounded to the enclosure and to the host controller.

2.1.2 Electromagnetic susceptibility

As a component assembly, the drive is not required to meet any susceptibility performance requirements. It is the responsibility of those integrating the drive within their systems to perform those tests required and design their system to ensure that equipment operating in the same system as the drive or external to the system does not adversely affect the performance of the drive. See Section 5.1.1 and Table 2, DC power requirements.

2.2 Electromagnetic compliance

Seagate uses an independent laboratory to confirm compliance to the directives/standard(s) for CE Marking and C-Tick Marking. The drive was tested in a representative system for typical applications. The selected system represents the most popular characteristics for test platforms. The system configurations include:

- Typical current use microprocessor
- 3.5-inch floppy disc drive
- Keyboard
- Monitor/display
- Printer
- External modem
- Mouse

Although the test system with this Seagate model complies to the directives/standard(s), we cannot guarantee that all systems will comply. The computer manufacturer or system integrator shall confirm EMC compliance and provide CE Marking and C-Tick Marking for their product.

Electromagnetic compliance for the European Union

If this model has the CE Marking it complies with the European Union requirements of the Electromagnetic Compatibility Directive 89/336/EEC of 03 May 1989 as amended by Directive 92/31/EEC of 28 April 1992 and Directive 93/68/EEC of 22 July 1993.

Australian C-Tick

If this model has the C-Tick Marking it complies with the Australia/New Zealand Standard AS/NZS3548 1995 and meets the Electromagnetic Compatibility (EMC) Framework requirements of Australia's Spectrum Management Agency (SMA).

Korean MIC

If this model has the Korean Ministry of Information and Communication (MIC) logo, it complies with paragraph 1 of Article 11 of the Electromagnetic Compatibility (EMC) Control Regulation and meets the Electromagnetic Compatibility Framework requirements of the Radio Research Laboratory (RRL) Ministry of Information and Communication Republic of Korea.

This drive has been tested and complies with the Electromagnetic Interference/Electromagnetic Susceptibility (EMI/EMS) for Class B products.

- EUT name (model number): ST336938N, ST336918LW, ST318418N and ST318438LW.
- Certificate number: E-H011-01-4292 (B), E-H011-01-4293 (B), E-H011-01-5655 (B) and E-H011-01-5654 (B) respectively.
- Trade name or applicant: Seagate Technology International
- Manufacturing start date: December 2001
- Manufacturer/nationality: Singapore

Taiwanese BSMI

If this model has two Chinese words meaning "EMC certification" followed by an eight digit identification number, as a Marking, it complies with Chinese National Standard (CNS) 13438 and meets the Electromagnetic Compatibility (EMC) Framework requirements of the Taiwanese Bureau of Standards, Metrology, and Inspection (BSMI).

2.3 Reference documents

Barracuda 36ES2 Installation Guide	Seagate P/N 100182976
Safety and Regulatory Agency Specifications	Seagate P/N 75789512
SCSI Interface Product Manual	Seagate P/N 75789509

Applicable ANSI Small Computer System Interface (SCSI) document numbers:

T10/1143D	Enhanced SCSI Parallel Interface (EPI)
T10/1236D	Primary Commands-2 (SPC-2)
T10/996D	SCSI Block Commands (SBC)
T10/1157D	SCSI Architectural Model-2 (SAM-2)
T10/1302D	SCSI Parallel Interface (SPI-3)

SFF-8451, SCA-2 Unshielded Connections

Package Test Specification	Seagate P/N 30190-001 (under 100 lb.)
Package Test Specification	Seagate P/N 30191-001 (over 100 lb.)
Specification, Acoustic Test Requirements, and Procedures	Seagate P/N 30553-001

In case of conflict between this document and any referenced document, this document takes precedence.

3.0 General description

Barracuda 36ES2 drives combine giant magnetoresistive (GMR) heads, partial response/maximum likelihood (PRML) read channel electronics, embedded servo technology, and a wide SCSI Ultra160 interface to provide high performance, high capacity data storage for a variety of systems including engineering workstations, network servers, mainframes, and supercomputers.

Ultra160 SCSI uses negotiated transfer rates. These transfer rates will occur only if your host adapter supports these data transfer rates and is compatible with the required hardware requirements of the I/O circuit type. This drive also operates at Ultra160 data transfer rates.

Table 1 lists the features that differentiate the Barracuda 36ES2 models.

Table 1: Drive model number vs. differentiating features

Model number	Number of active heads	I/O circuit type [1]	Number of I/O connector pins	Number of I/O data bus bits	Data buffer size
ST336938LW	2	Single-ended (SE) and low voltage differential (LVD)	68	16	2 Mbytes
ST336918N	2	Single-ended (SE)	50	8	2 Mbytes
ST318438LW	2	Single-ended (SE) and low voltage differential (LVD)	68	16	2 Mbytes
ST318418N	2	Single-ended (SE)	50	8	2 Mbytes

[1] See Section 9.6 for details and definitions.

The drive records and recovers data on approximately 3.74-inch (95 mm) non-removable discs.

The drive supports the Small Computer System Interface (SCSI) as described in the ANSI SCSI interface specifications to the extent described in this manual (Volume 1), which defines the product performance characteristics of the Barracuda 36ES2 family of drives, and the *SCSI Interface Product Manual*, part number 75789509, which describes the general interface characteristics of this and other families of Seagate SCSI drives.

The drive's interface supports multiple initiators, disconnect/reconnect, and automatic features that relieve the host from the necessity of knowing the physical characteristics of the targets (logical block addressing is used).

The head and disc assembly (HDA) is sealed at the factory. Air circulates within the HDA through a non-replaceable filter to maintain a contamination-free HDA environment.

Never disassemble the HDA and do not attempt to service items in the sealed enclosure (heads, media, actuator, etc.) as this requires special facilities. The drive contains no replaceable parts. Opening the HDA voids your warranty.

Barracuda 36ES2 drives use a dedicated landing zone at the innermost radius of the media to eliminate the possibility of destroying or degrading data by landing in the data zone. The drive automatically goes to the landing zone when power is removed.

An automatic shipping lock prevents potential damage to the heads and discs that results from movement during shipping and handling. The shipping lock automatically disengages when power is applied to the drive and the head load process begins.

Barracuda 36ES2 drives decode track 0 location data from the servo data embedded on each surface to eliminate mechanical transducer adjustments and related reliability concerns.

A high-performance actuator assembly with a low-inertia, balanced, patented, straight-arm design provides excellent performance with minimal power dissipation.

3.1 Standard features

The Barracuda 36ES2 family has the following standard features:

- Integrated Ultra160 SCSI controller
- Multimode SCSI drivers and receivers—single-ended (SE) and low voltage differential (LVD)
- 16 bit I/O data bus on LW models. 8 bit I/O data bus on the N model.
- Asynchronous and synchronous data transfer protocol
- Firmware downloadable via SCSI interface
- Selectable even-byte sector sizes from 512 to 4,096 bytes/sector
- Programmable sector reallocation scheme
- Flawed sector reallocation at format time
- Programmable auto write and read reallocation
- Reallocation of defects on command (post format)
- Enhanced ECC maximum burst correction length of 240 bits with a guaranteed burst correction length of 233 bits.
- Sealed head and disc assembly
- No preventative maintenance or adjustment required
- Dedicated head landing zone
- Embedded servo design
- Self diagnostics performed when power is applied to the drive
- 1:1 Interleave
- Zoned bit recording (ZBR)
- Vertical, horizontal, or top down mounting
- Dynamic spindle brake
- 2,048 kbyte data buffer
- Drive Self Test (DST)

3.2 Media characteristics

The media used on the drive has a diameter of approximately 3.74 inches (95 mm). The aluminum substrate is coated with a thin film magnetic material, overcoated with a proprietary protective layer for improved durability and environmental protection.

3.3 Performance

- Supports industry standard Ultra160 SCSI interface
- Programmable multi-segmentable cache buffer (see Section 3.1)
- 7,200 RPM spindle. Average latency = 4.17 ms
- Command queuing of up to 64 commands
- Background processing of queue
- Supports start and stop commands (spindle stops spinning)

3.4 Reliability

- 800,000 hour MTBF
- LSI circuitry
- Balanced low mass rotary voice coil actuator
- Incorporates industry-standard Self-Monitoring, Analysis and Reporting Technology (S.M.A.R.T.)
- 3-year warranty

3.5 Unformatted and formatted capacities

Formatted capacity depends on the number of spare reallocation sectors reserved and the number of bytes per sector. The following table shows the standard OEM model capacities:

	Formatted data block size 512 bytes/sector [1]
ST336938LW	044D53B5h (36.954 GB) [2]
ST336918N	044D53B5h (36.954 GB) [2]
ST318438LW	0251C800h (19.924 GB) [2]
ST318418N	0251C800h (19.924 GB) [2]

Notes.

[1] Sector size selectable at format time. Users having the necessary equipment may modify the data block size before issuing a format command and obtain different formatted capacities than those listed. See Mode Select command and Format command in the *SCSI Interface Product Manual*, part number 75789509.

[2] User available capacity depends on spare reallocation scheme selected, the number of data tracks per sparing zone, and the number of alternate sectors (LBAs) per sparing zone.

3.6 Programmable drive capacity

Using the Mode Select command, the drive can change its capacity to something less than maximum. See the Mode Select Parameter List table in the *SCSI Interface Product Manual*, part number 75789509. Refer to the Parameter list block descriptor number of blocks field. A value of zero in the number of blocks field indicates that the drive shall not change the capacity it is currently formatted to have. A number in the number of blocks field that is less than the maximum number of LBAs changes the total drive capacity to the value in the block descriptor number of blocks field. A value greater than the maximum number of LBAs is rounded down to the maximum capacity.

3.7 Factory installed accessories

OEM Standard drives are shipped with the *Barracuda 36ES2 Installation Guide*, part number 100182976, and the *Safety and Regulatory Agency Specifications*, part number 75789512, unless otherwise specified. The factory also ships with the drive a small bag of jumper plugs used for the J2, J5, and J6 option select jumper headers.

3.8 Options (factory installed)

All customer requested options are incorporated during production or packaged at the manufacturing facility before shipping. Some of the options available are (not an exhaustive list of possible options):

- Other capacities can be ordered depending on sparing scheme and sector size requested.
- Single unit shipping pack. The drive is normally shipped in bulk packaging to provide maximum protection against transit damage. Units shipped individually require additional protection as provided by the single unit shipping pack. Users planning single unit distribution should specify this option.
- The *Barracuda 36ES2 Installation Guide*, part number 100182976, is usually included with each standard OEM drive shipped, but extra copies may be ordered.
- The *Safety and Regulatory Agency Specifications*, part number 75789512, is usually included with each standard OEM drive shipped, but extra copies may be ordered.

4.0 Performance characteristics

4.1 Internal drive characteristics (transparent to user)

	ST336938/ ST336918	ST318438/ ST318418	
Drive capacity	36.954	19.924	Gbytes (formatted, rounded off)
Read/write heads	2	2	
Bytes/track	401	401	KBytes (average, rounded off)
Bytes/surface	18.477	18.477	Mbytes (unformatted, rounded off)
Tracks/surface (total)	56,332	26,000	Tracks (user accessible)
Tracks/inch	58,480	58,480	TPI
Peak bits/inch	480	480	KBPI
Internal data rate	298-500	434-500	Mbits/sec (variable with zone)
Disc rotational speed	7,200	7,200	r/min (±0.5%)
Average rotational latency	4.17	4.17	msec

4.2 SCSI performance characteristics (visible to user)

The values given in Section 4.2.1 apply to all models of the Barracuda 36ES2 family unless otherwise specified. Refer to Section 9.10 and to the *SCSI Interface Product Manual*, part number 75789509, for additional timing details.

4.2.1 Access time [5]

	Including controller overhead (without disconnect) [1] [3]		Not including controller overhead (without disconnect) [1] [3]	
	Drive level		Drive level	
	Read	Write	Read	Write
36 Gbyte Model	msec		msec	
Average–Typical [2]	8.7	9.5	8.5	9.3
Single Track–Typical [2]	0.8	1.2	0.6	1.0
Full Stroke–Typical [2]	15.1	15.8	14.9	15.6
18 Gbyte Model				
Average–Typical [2]	7.1	7.7	6.9	7.5
Single Track–Typical [2]	0.8	1.2	0.6	1.0
Full Stroke–Typical [2]	10.2	10.9	10.0	10.7

4.2.2 Format command execution time (minutes) [1]

	ST336938, ST336918 ST318438, ST318418
Maximum (with verify)	46
Maximum (no verify)	23

4.2.3 Generalized performance characteristics

Minimum sector interleave 1 to 1

Data buffer transfer rate to/from disc media (one 512-byte sector):

Minimum [3]*	32.3 Mbytes/sec
Average [3]	45.9 Mbytes/sec
Maximum [3]	52.2 Mbytes/sec

SCSI interface data transfer rate (asynchronous):

Maximum instantaneous one byte wide	5.0 Mbytes/sec [4]
Maximum instantaneous two bytes wide	10.0 Mbytes/sec [4]

Synchronous formatted transfer rate	**Ultra2 SCSI**	**Ultra160 SCSI**
In single-ended (SE) interface mode	5.0 to 40 Mbytes/sec	5.0 to 80 Mbytes/sec
In low voltage differential (LVD) interface mode	5.0 to 80 Mbytes/sec	5.0 to 160 Mbytes/sec

Sector Sizes:

Default	512 byte user data blocks
Variable	512 to 4,096 bytes per sector in even number of bytes per sector. If n (number of bytes per sector) is odd, then n-1 will be used.

Read/write consecutive sectors on a track	Yes
Flaw reallocation performance impact (for flaws reallocated at format time using the spare sectors per sparing zone reallocation scheme.)	Negligible
Average rotational latency	4.17 msec

Notes for Section 4.2.

[1] Execution time measured from receipt of the last byte of the Command Descriptor Block (CDB) to the request for a Status Byte Transfer to the Initiator (excluding connect/disconnect).
[2] Typical access times are measured under nominal conditions of temperature, voltage, and horizontal orientation as measured on a representative sample of drives.
[3] Assumes no errors and no sector has been relocated.
[4] Assumes system ability to support the rates listed and no cable loss.
[5] Access time = controller overhead + average seek time.
Access to data = controller overhead + average seek time + latency time.

4.3 Start/stop time

After DC power at nominal voltage has been applied, the drive becomes ready within 20 seconds if the Motor Start Option is disabled (i.e. the motor starts as soon as the power has been applied). If a recoverable error condition is detected during the start sequence, the drive executes a recovery procedure which may cause the time to become ready to exceed 20 seconds. During spin up to ready time the drive responds to some commands over the SCSI interface in less than 3 seconds after application of power. Stop time is less than 15 seconds from removal of DC power.

If the Motor Start Option is enabled, the internal controller accepts the commands listed in the *SCSI Interface Product Manual* less than 3 seconds after DC power has been applied. After the Motor Start Command has been received the drive becomes ready for normal operations within 10 seconds typically (excluding an error recovery procedure). The Motor Start Command can also be used to command the drive to stop the spindle (see *SCSI Interface Product Manual*, part number 75789509).

There is no power control switch on the drive.

4.4 Prefetch/multi-segmented cache control

The drive provides prefetch (read look-ahead) and multi-segmented cache control algorithms that in many cases can enhance system performance. “Cache” as used herein refers to the drive buffer storage space when it is used in cache operations. To select prefetch and cache features the host sends the Mode Select command with the proper values in the applicable bytes in Mode Page 08h (see *SCSI Interface Product Manual,* part number 75789509). Prefetch and cache operation are independent features from the standpoint that each is enabled and disabled independently via the Mode Select command. However, in actual operation the prefetch feature overlaps cache operation somewhat as is noted in Section 4.5.1 and 4.5.2.

All default cache and prefetch Mode parameter values (Mode Page 08h) for standard OEM versions of this drive family are given in Tables 8 and 9.

4.5 Cache operation

In general, 2,048 Kbytes of the physical buffer space in the drive can be used as storage space for cache operations. The buffer can be divided into logical segments (Mode Select Page 08h, byte 13) from which data is read and to which data is written. The drive maintains a table of logical block disk medium addresses of the data stored in each segment of the buffer. If cache operation is enabled (RCD bit = 0 in Mode Page 08h, byte 2, bit 0. See *SCSI Interface Product Manual,* part number 75789509), data requested by the host with a Read command is retrieved from the buffer (if it is there), before any disc access is initiated. If cache operation is not enabled, the buffer (still segmented with required number of segments) is still used, but only as circular buffer segments during disc medium read operations (disregarding Prefetch operation for the moment). That is, the drive does not check in the buffer segments for the requested read data, but goes directly to the medium to retrieve it. The retrieved data merely passes through some buffer segment on the way to the host. On a cache miss, all data transfers to the host are in accordance with buffer-full ratio rules. On a cache hit the drive ignores the buffer-full ratio rules. See explanations associated with Mode page 02h (disconnect/reconnect control) in the *SCSI Interface Product Manual*.

The following is a simplified description of a read operation with cache operation enabled:

Case A - A Read command is received and the first logical block (LB) is already in cache:

1. Drive transfers to the initiator the first LB requested plus all subsequent contiguous LBs that are already in the cache. This data may be in multiple segments.
2. When the requested LB is reached that is not in any cache segment, the drive fetches it and any remaining requested LBs from the disc and puts them in a segment of the cache. The drive transfers the remaining requested LBs from the cache to the host in accordance with the disconnect/reconnect specification mentioned above.
3. If the prefetch feature is enabled, refer to Section 4.5.2 for operation from this point.

Case B - A Read command requests data, the first LB of which is not in any segment of the cache:

1. The drive fetches the requested LBs from the disc and transfers them into a segment, and from there to the host in accordance with the disconnect/reconnect specification referred to in case A.
2. If the prefetch feature is enabled, refer to Section 4.5.2 for operation from this point.

Each buffer segment is actually a self-contained circular storage area (wrap-around occurs), the length of which is an integer number of disc medium sectors. The wrap-around capability of the individual segments greatly enhances the buffer's overall performance as a cache storage, allowing a wide range of user selectable configurations, which includes their use in the prefetch operation (if enabled), even when cache operation is disabled (see Section 4.5.2). The number of segments may be selected using the Mode Select command, but the size can not be directly selected. Size is selected only as a by-product of selecting the segment number specification. The size in Kbytes of each segment is not reported by the Mode Sense command page 08h, bytes 14 and 15. The value 0x0000 is always reported. If a size specification is sent by the host in a Mode Select command (bytes 14 and 15) no new segment size is set up by the drive, and if the STRICT bit in Mode page 00h (byte 2, bit 1) is set to one, the drive responds as it does for any attempt to change unchangeable parameters (see *SCSI Interface Product Manual,* part number 75789509). The drive supports operation of any integer number of segments from 1 to 32. The default number of segments is defined in Tables 8 and 9.

4.5.1 Caching write data

Write caching is a write operation by the drive that makes use of a drive buffer storage area where the data to be written to the medium is stored in one or more segments while the drive performs the write command.

If read caching is enabled (RCD=0), then data written to the medium is retained in the cache to be made available for future read cache hits. The same buffer space and segmentation is used as set up for read functions. The buffer segmentation scheme is set up or changed independently, having nothing to do with the state of RCD. When a write command is issued, if RCD=0, the cache is first checked to see if any logical blocks that are to be written are already stored in the cache from a previous read or write command. If there are, the respective cache segments are cleared. The new data is cached for subsequent Read commands.

If the number of write data logical blocks exceeds the size of the segment being written into, when the end of the segment is reached, the data is written into the beginning of the same cache segment, overwriting the data

that was written there at the beginning of the operation. However, the drive does not overwrite data that has not yet been written to the medium.

If write caching is enabled (WCE=1), then the drive may return Good status on a write command after the data has been transferred into the cache, but before the data has been written to the medium. If an error occurs while writing the data to the medium, and Good status has already been returned, a deferred error will be generated.

The Synchronize Cache command may be used to force the drive to write all cached write data to the medium. Upon completion of a Synchronize Cache command, all data received from previous write commands will have been written to the medium.

Tables 8 and 9 show Mode default settings for the drives.

4.5.2 Prefetch operation

If the Prefetch feature is enabled, data in contiguous logical blocks on the disc immediately beyond that which was requested by a Read command can be retrieved and stored in the buffer for immediate transfer from the buffer to the host on subsequent Read commands that request those logical blocks (this is true even if cache operation is disabled). Though the prefetch operation uses the buffer as a cache, finding the requested data in the buffer is a prefetch hit, not a cache operation hit. Prefetch is enabled using Mode Select page 08h, byte 12, bit 5 (Disable Read Ahead - DRA bit). DRA bit = 0 enables prefetch. Since data that is prefetched replaces data already in some buffer segment(s), the host can limit the amount of prefetch data to optimize system performance. The max prefetch field (bytes 8 and 9) limits the amount of prefetch. The drive does not use the Prefetch Ceiling field (bytes 10 and 11).

During a prefetch operation, the drive crosses a cylinder boundary to fetch more data only if the Discontinuity (DISC) bit is set to one in bit 4 of byte 2 of Mode parameters page 08h.

Whenever prefetch (read look-ahead) is enabled (enabled by DRA = 0), it operates under the control of ARLA (Adaptive Read Look-Ahead). If the host uses software interleave, ARLA enables prefetch of contiguous blocks from the disc when it senses that a prefetch hit will likely occur, even if two consecutive read operations were not for physically contiguous blocks of data (e.g., “software interleave”). ARLA disables prefetch when it decides that a prefetch hit will not likely occur. If the host is not using software interleave, and if two sequential read operations are not for contiguous blocks of data, ARLA disables prefetch, but as long as sequential read operations request contiguous blocks of data, ARLA keeps prefetch enabled.

5.0 Reliability specifications

The following reliability specifications assume correct host/drive operational interface, including all interface timings, power supply voltages, environmental requirements and drive mounting constraints (see Section 8.3).

Seek Errors	Less than 10 in 10^8 seeks
Read Error Rates [1]	
Recovered Data	Less than 10 errors in 10^{12} bits transferred (OEM default settings)
Unrecovered Data	Less than 1 sector in 10^{15} bits transferred (OEM default settings)
Miscorrected Data	Less than 1 sector in 10^{21} bits transferred
MTBF	800,000 hours
Service Life	3 years
Preventive Maintenance	None required

Note.

[1] Error rate specified with automatic retries and data correction with ECC enabled and all flaws reallocated.

5.1 Error rates

The error rates stated in this specification assume the following:

- The drive is operated per this specification using DC power as defined in this manual (see Section 6.2).
- The drive has been formatted with the SCSI Format command.
- Errors caused by media defects or host system failures are excluded from error rate computations. Refer to Section 3.2, “Media Characteristics.”
- Assume random data.

5.1.1 Environmental interference

When evaluating systems operation under conditions of Electromagnetic Interference (EMI), the performance of the drive within the system shall be considered acceptable if the drive does not generate an unrecoverable condition.

An unrecoverable error, or unrecoverable condition, is defined as one that:

- Is not detected and corrected by the drive itself;
- Is not capable of being detected from the error or fault status provided through the drive or SCSI interface; or
- Is not capable of being recovered by normal drive or system recovery procedures without operator intervention.

5.1.2 Read errors

Before determination or measurement of read error rates:

- The data that is to be used for measurement of read error rates must be verified as being written correctly on the media.
- All media defect induced errors must be excluded from error rate calculations.

5.1.3 Write errors

Write errors can occur as a result of media defects, environmental interference, or equipment malfunction. Therefore, write errors are not predictable as a function of the number of bits passed.

If an unrecoverable write error occurs because of an equipment malfunction in the drive, the error is classified as a failure affecting MTBF. Unrecoverable write errors are those which cannot be corrected within two attempts at writing the record with a read verify after each attempt (excluding media defects).

5.1.4 Seek errors

A seek error is defined as a failure of the drive to position the heads to the addressed track. There shall be no more than ten recoverable seek errors in 10^8 physical seek operations. After detecting an initial seek error, the drive automatically performs an error recovery process. If the error recovery process fails, a seek positioning

error (15h) is reported with a Medium error (3h) or Hardware error (4h) reported in the Sense Key. This is an unrecoverable seek error. Unrecoverable seek errors are classified as failures for MTBF calculations. Refer to the *SCSI Interface Product Manual,* part number 75789509, for Request Sense information.

5.2 Reliability and service

You can enhance the reliability of Barracuda 36ES2 disc drives by ensuring that the drive receives adequate cooling. Section 6.0 provides temperature measurements and other information that may be used to enhance the service life of the drive. Section 8.2.1 provides recommended air-flow information.

5.2.1 Mean time between failure

The production disc drive shall achieve an MTBF of 800,000 hours when operated in an environment that ensures the case temperatures specified in Section 6.4.1 are not exceeded. Short-term excursions up to the specification limits of the operating environment will not affect MTBF performance. Continual or sustained operation at case temperatures above the values shown in Section 6.4.1 may degrade product reliability.

The MTBF target is specified as device power-on hours (POH) for all drives in service per failure.

$$\text{Estimated power-on operating hours in the period} = \frac{\text{MTBF per measurement period}}{\text{Number of drive failures in the period}}$$

Estimated power-on operation hours means power-up hours per disc drive times the total number of disc drives in service. Each disc drive shall have accumulated at least nine months of operation. Data shall be calculated on a rolling average base for a minimum period of six months.

MTBF is based on the following assumptions:

- 8,760 power-on hours per year.
- 250 average on/off cycles per year.
- Operations at nominal voltages.
- Systems will provide adequate cooling to ensure the case temperatures specified in Section 6.4.1 are not exceeded.

Drive failure means any stoppage or substandard performance caused by drive malfunction.

A S.M.A.R.T. predictive failure indicates that the drive is deteriorating to an imminent failure and is considered an MTBF hit.

5.2.2 Preventive maintenance

No routine scheduled preventive maintenance shall be required.

5.2.3 Service life

The drive shall have a useful service life of three years. Depot repair or replacement of major parts is permitted during the lifetime (see Section 5.2.4)

5.2.4 Service philosophy

Special equipment is required to repair the drive HDA. In order to achieve the above service life, repairs must be performed only at a properly equipped and staffed service and repair facility. Troubleshooting and repair of PCBs in the field is not recommended, because of the extensive diagnostic equipment required for effective servicing. Also, there are no spare parts available for this drive. Drive warranty is voided if the HDA is opened.

5.2.5 Service tools

No special tools are required for site installation or recommended for site maintenance. Refer to Section 5.2.4. The depot repair philosophy of the drive precludes the necessity for special tools. Field repair of the drive is not practical since there are no user purchasable parts in the drive.

5.2.6 Hot plugging Barracuda 36ES2 disc drives

The ANSI SPI-3 (T10/1302D) document defines the physical requirements for removal and insertion of SCSI devices on the SCSI bus. Four cases are addressed. The cases are differentiated by the state of the SCSI bus when the removal or insertion occurs.

Case 1 - All bus devices powered off during removal or insertion

Case 2 - RST signal asserted continuously during removal or insertion

Case 3 - Current I/O processes not allowed during insertion or removal

Case 4 - Current I/O process allowed during insertion or removal, except on the device being changed

Seagate Barracuda 36ES2 disc drives support all four hot plugging cases. Provision shall be made by the system such that a device being inserted makes power and ground connections prior to the connection of any device signal contact to the bus. A device being removed shall maintain power and ground connections after the disconnection of any device signal contact from the bus (see T10/1302D SPI-3 Annex C).

It is the responsibility of the systems integrator to assure that no hazards from temperature, energy, voltage, or ESD potential are presented during the hot connect/disconnect operation.

All I/O processes for the SCSI device being inserted or removed shall be quiescent. All SCSI devices on the bus shall have receivers that conform to the SPI-3 standard.

If the device being hot plugged uses single-ended (SE) drivers and the bus is currently operating in low voltage differential (LVD) mode, then all I/O processes for all devices on the bus must be completed, and the bus quiesced, before attempting to hot plug. Following the insertion of the newly installed device, the SCSI host adapter must issue a Bus Reset, followed by a synchronous transfer negotiation. Failure to perform the SCSI Bus Reset could result in erroneous bus operations.

The SCSI bus termination and termination power source shall be external to the device being inserted or removed.

End users should not mix devices with high voltage differential (HVD) drivers and receivers and devices with SE, LVD, or multimode drivers and receivers on the same SCSI bus since the common mode voltages in the HVD environment may not be controlled to safe levels for SE and LVD devices (see ANSI SPI-3).

The disc drive spindle must come to a complete stop prior to completely removing the drive from the cabinet chassis. Use of the Stop Spindle command or partial withdrawal of the drive, enough to be disconnected from the power source, prior to removal are methods for insuring that this requirement is met. During drive insertion, care should be taken to avoid exceeding the limits stated in Section 6.4.4, "Shock and vibration" in this manual.

5.2.7 S.M.A.R.T.

S.M.A.R.T. is an acronym for Self-Monitoring Analysis and Reporting Technology. This technology is intended to recognize conditions that indicate a drive failure and is designed to provide sufficient warning of a failure to allow data back-up before an actual failure occurs.

Note. The firmware will monitor specific attributes for degradation over time but cannot predict instantaneous drive failures.

Each attribute has been selected to monitor a specific set of failure conditions in the operating performance of the drive, and the thresholds are optimized to minimize “false” and “failed” predictions.

Controlling S.M.A.R.T.

The operating mode of S.M.A.R.T. is controlled by the DEXCPT bit and the PERF bit of the “Informational Exceptions Control Mode Page” (1Ch). The DEXCPT bit is used to enable or disable the S.M.A.R.T. process. Setting the DEXCPT bit will disable all S.M.A.R.T. functions. When enabled, S.M.A.R.T. will collect on-line data as the drive performs normal read/write operations. When the PERF bit is set, the drive is considered to be in “On-line Mode Only” and will not perform off-line functions.

The process of measuring off-line attributes and saving data can be forced by the RTZ command. Forcing S.M.A.R.T. will reset the timer so that the next scheduled interrupt will be two hours.

The drive can be interrogated by the host to determine the time remaining before the next scheduled measurement and data logging process will occur. This is accomplished by a log sense command to log page 0x3E. The purpose is to allow the customer to control when S.M.A.R.T. interruptions occur. As described above, forcing S.M.A.R.T by the Rezero Unit command will reset the timer.

Performance impact

S.M.A.R.T. attribute data will be saved to the disc for the purpose of recreating the events that caused a predictive failure. The drive will measure and save parameters once every two hours subject to an idle period on the SCSI bus. The process of measuring off-line attribute data and saving data to the disc is uninterruptable and the maximum delay is summarized below:

Maximum processing delay

	On-line only delay	**Fully enabled delay**
	DEXCPT = 0, PERF = 1	**DEXCPT = 0, PERF = 0**
S.M.A.R.T. delay times	ST336938: 150 msec	ST336938: 270 msec
	ST336918: 150 msec	ST336918: 270 msec
	ST318438: 150 msec	ST318438: 270 msec
	ST318418: 150 msec	ST318418: 270 msec

Reporting control

Reporting is controlled in the Informational Exceptions Control Page (1Ch). Subject to the reporting method, the firmware will issue a 01-5D00 sense code to the host. The error code is preserved through bus resets and power cycles.

Determining rate

S.M.A.R.T. monitors the rate at which errors occur and signals a predictive failure if the rate of degraded error rate increases to an unacceptable level. To determine rate, error events are logged and compared to the number of total operations for a given attribute. The interval defines the number of operations over which to measure the rate. The counter that keeps track of the current number of operations is referred to as the Interval Counter.

S.M.A.R.T. measures error rate, hence for each attribute the occurrence of an error is recorded. A counter keeps track of the number of errors for the current interval. This counter is referred to as the Failure Counter.

Error rate is simply the number of errors per operation. The algorithm that S.M.A.R.T. uses to record rates of error is to set thresholds for the number of errors and the interval. If the number of errors exceeds the threshold before the interval expires, then the error rate is considered to be unacceptable. If the number of errors does not exceed the threshold before the interval expires, then the error rate is considered to be acceptable. In either case, the interval and failure counters are reset and the process starts over.

Predictive failures

S.M.A.R.T. signals predictive failures when the drive is performing unacceptably for a period of time. The firmware keeps a running count of the number of times the error rate for each attribute is unacceptable. To accomplish this, a counter is incremented whenever the error rate is unacceptable and decremented (not to exceed zero) whenever the error rate is acceptable. Should the counter continually be incremented such that it reaches the predictive threshold, a predictive failure is signaled. This counter is referred to as the Failure History Counter. There is a separate Failure History Counter for each attribute.

5.2.8 Drive Self Test (DST)

Drive Self Test (DST) is a technology designed to recognize drive fault conditions that qualify the drive as a failed unit. DST validates the functionality of the drive at a system level.

There are two test coverage options implemented in DST:

1. extended test
2. short test

The most thorough option is the extended test that performs various tests on the drive and scans every logical block address (LBA) of the drive. The short test is time-restricted and limited in length—it does not scan the entire media surface, but does some fundamental tests and scans portions of the media.

If DST encounters an error during either of these tests, it reports a fault condition. If the drive fails the test, remove it from service and return it to Seagate for service.

5.2.8.1 DST Failure Definition

The drive will present a “diagnostic failed” condition through the self-tests results value of the diagnostic log page if a functional failure is encountered during DST. The channel and servo parameters are not modified to test the drive more stringently, and the number of retries are not reduced. All retries and recovery processes are enabled during the test. If data is recoverable, no failure condition will be reported regardless of the number of retries required to recover the data.

The following conditions are considered DST failure conditions:

- Seek error after retries are exhausted
- Track-follow error after retries are exhausted
- Read error after retries are exhausted
- Write error after retries are exhausted

Recovered errors will not be reported as diagnostic failures.

5.2.8.2 Implementation

This section provides all of the information necessary to implement the DST function on this drive.

5.2.8.2.1 State of the drive prior to testing

The drive must be in a ready state before issuing the Send Diagnostic command. There are multiple reasons why a drive may not be ready, some of which are valid conditions, and not errors. For example, a drive may be in process of doing a format, or another DST. It is the responsibility of the host application to determine the “not ready” cause.

While not technically part of DST, a Not Ready condition also qualifies the drive to be returned to Seagate as a failed drive.

A Drive Not Ready condition is reported by the drive under the following conditions:

- Motor will not spin
- Motor will not lock to speed
- Servo will not lock on track
- Drive cannot read configuration tables from the disc

In these conditions, the drive responds to a Test Unit Ready command with an 02/04/00 or 02/04/03 code.

5.2.8.2.2 Invoking DST

To invoke DST, submit the Send Diagnostic command with the appropriate Function Code (001b for the short test or 010b for the extended test) in bytes 1, bits 5, 6, and 7. Refer to the *SCSI Interface Product Manual,* part number 75789509, for additional information about invoking DST.

5.2.8.2.3 Short and extended tests

The short and extended test options are described in the following two subsections.

Each test consists of three segments: an electrical test segment, a servo test segment, and a read/verify scan segment.

Short test (Function Code: 001b)

The purpose of the short test is to provide a time-limited test that tests as much of the drive as possible within 120 seconds. The short test does not scan the entire media surface, but does some fundamental tests and scans portions of the media. A complete read/verify scan is not performed and only factual failures will report a fault condition. This option provides a quick confidence test of the drive.

Extended test (Function Code: 010b)

The objective of the extended test option is to empirically test critical drive components. For example, the seek tests and on-track operations test the positioning mechanism. The read operation tests the read head element and the media surface. The write element is tested through read/write/read operations. The integrity of the media is checked through a read/verify scan of the media. Motor functionality is tested by default as a part of these tests.

The anticipated length of the Extended test is reported through the Control Mode page.

5.2.8.2.4 Log page entries

When the drive begins DST, it creates a new entry in the Self-test Results Log page. The new entry is created by inserting a new self-test parameter block at the beginning of the self-test results log parameter section of the log page. Existing data will be moved to make room for the new parameter block. The drive reports 20 parameter blocks in the log page. If there are more than 20 parameter blocks, the least recent parameter block will be deleted. The new parameter block will be initialized as follows:

1. The Function Code field is set to the same value as sent in the DST command
2. The Self-Test Results Value field is set to Fh
3. The drive will store the log page to non-volatile memory

After a self-test is complete or has been aborted, the drive updates the Self-Test Results Value field in its Self-Test Results Log page in non-volatile memory. The host may use Log Sense to read the results from up to the last 20 self-tests performed by the drive. The self-test results value is a 4-bit field that reports the results of the test. If the field is zero, the drive passed with no errors detected by the DST. If the field is not zero, the test failed for the reason reported in the field.

The drive will report the failure condition and LBA (if applicable) in the Self-test Results Log parameter. The Sense key, ASC, ASCQ, and FRU are used to report the failure condition.

5.2.8.2.5 Abort

There are several ways to abort a diagnostic. You can use a SCSI Bus Reset or a Bus Device Reset message to abort the diagnostic.

You can abort a DST executing in background mode by using the abort code in the DST Function Code field. This will cause a 01 (self-test aborted by the application client) code to appear in the self-test results values log. All other abort mechanisms will be reported as a 02 (self-test routine was interrupted by a reset condition).

5.2.9 Product warranty

Beginning on the date of shipment to customer and continuing for a period of three years, Seagate warrants that each product (including components and subassemblies) or spare part that fails to function properly under normal use due to defect in materials, workmanship, or due to nonconformance to the applicable specifications will be repaired or replaced, at Seagate's option and at no charge to customer, if returned by customer at customer's expense to Seagate's designated facility in accordance with Seagate's warranty procedure. Seagate will pay for transporting the repair or replacement item to customer. For more detailed warranty information refer to the Standard terms and conditions of Purchase for Seagate products.

Shipping

When transporting or shipping a drive, a Seagate approved container must be used. Keep your original box. They are easily identified by the Seagate-approved package label. Shipping a drive in a non-approved container voids the drive warranty.

Seagate repair centers may refuse receipt of components improperly packaged or obviously damaged in transit. Contact your Authorized Seagate Distributor to purchase additional boxes. Seagate recommends shipping by an air-ride carrier experienced in handling computer equipment.

Product repair and return information

Seagate customer service centers are the only facilities authorized to service Seagate drives. Seagate does not sanction any third-party repair facilities. Any unauthorized repair or tampering with the factory-seal voids the warranty.

6.0 Physical/electrical specifications

This section provides information relating to the physical and electrical characteristics of the Barracuda 36ES2 drive.

6.1 AC power requirements

None.

6.2 DC power requirements

The voltage and current requirements for a single drive are shown in the following table. Values indicated apply at the drive power connector. The table shows current values in Amperes.

Table 2: DC power requirements

	Notes	ST336938 ST336918		ST336938		ST318438 ST318418		ST318438	
		SE mode		LVD mode		SE mode		LVD mode	
Voltage		+5 V	+12 V	+5 V	+12 V	+5 V	+12 V	+5 V	+12 V
Regulation	[5]	±5%	±5%[2]	±5%	±5%[2]	±5%	±5%[2]	±5%	±5%[2]
Average idle current DC$\overline{X}$	[1][7]	0.77	0.31	0.77	0.31	0.78	0.31	0.78	0.31
Maximum starting current (peak DC) DC	[1][3]	0.84	2.02	0.86	2.02	0.83	2.05	0.82	2.05
Delayed motor start (max) DC	[1][4]	0.66	0.03	0.66	0.03	0.63	0.03	0.63	0.03
Peak operating current									
DC$\overline{X}$	[1][6]	1.11	0.72	1.11	0.72	1.15	0.65	1.16	0.65
Maximum DC	[1]	1.14	0.73	1.14	0.73	1.17	0.66	1.17	0.66
Maximum (peak)		1.78	1.74	1.78	1.74	1.80	1.76	1.78	1.76

[1] Measured with average reading DC ammeter or equivalent sampling scope. Instantaneous current peaks will exceed these values. Power supply at nominal voltage. Number of units tested = 6 at ambient.

[2] For +12 V, a –10% tolerance is permissible during initial start of spindle, and must return to ±5% before 7,200 rpm is reached. The ±5% must be maintained after the drive signifies that its power-up sequence has been completed and that the drive is able to accept selection by the host initiator.

[3] See +12 V current profile in Figure 2.

[4] This condition occurs when the Motor Start Option is enabled and the drive has not yet received a Start Motor command.

[5] See Section 6.2.1 “Conducted Noise Immunity.” Specified voltage tolerance is inclusive of ripple, noise, and transient response.

[6] Operating condition is defined as 8 random block reads at 133 I/Os per second. Current and power specified at nominal voltages. Decreasing +5 volts by 5% increases +5 volt current by 4%.

[7] During idle, the drive heads are relocated every 60 seconds to a random location within the band from track zero to one-fourth of maximum track.

General Notes from Table 2:

1. Minimum current loading for each supply voltage is not less than 1.5% of the maximum operating current shown.
2. The +5 and +12 volt supplies shall employ separate ground returns.
3. Where power is provided to multiple drives from a common supply, careful consideration for individual drive power requirements should be noted. Where multiple units are powered on simultaneously, the peak starting current must be available to each device.
4. Parameters, other than spindle start, are measured after a 10-minute warm up.
5. No terminator power.

6.2.1 Conducted noise immunity

Noise is specified as a periodic and random distribution of frequencies covering a band from DC to 10 MHz. Maximum allowed noise values given below are peak to peak measurements and apply at the drive power connector.

+5 V = 150 mV pp from 0 to 100 kHz and 100 mV pp from 100 kHz to 10 MHz
+12 V = 150 mV pp from 0 to 100 kHz and 100 mV pp from 100 kHz to 10 MHz

6.2.2 Power sequencing

The drive does not require power sequencing. The drive protects against inadvertent writing during power-up and down. Daisy-chain operation requires that power be maintained on the SCSI bus terminator to ensure proper termination of the peripheral I/O cables. To automatically delay motor start based on the target ID (SCSI ID) enable the Delay Motor Start option and disable the Enable Motor Start option on the J2 connector. See Section 8.1 for pin selection information. To delay the motor until the drive receives a Start Unit command, enable the Enable Remote Motor Start option on the J2 connector.

6.2.3 12 V - Current profile

Figure 2 identifies the drive +12 V current profiles. The current during the various times is as shown:

T0 - Power is applied to the drive.
T1 - Controller self tests are performed.
T2 - Spindle begins to accelerate under current limiting after performing drive internal diagnostics. See Note 1 of Table 2.
T3 - The spindle is up to speed and the head-arm restraint is unlocked.
T4 - The adaptive servo calibration sequence is performed.
T5 - Calibration is complete and drive is ready for reading and writing.

Note. All times and currents are typical. See Table 2 for maximum current requirements.

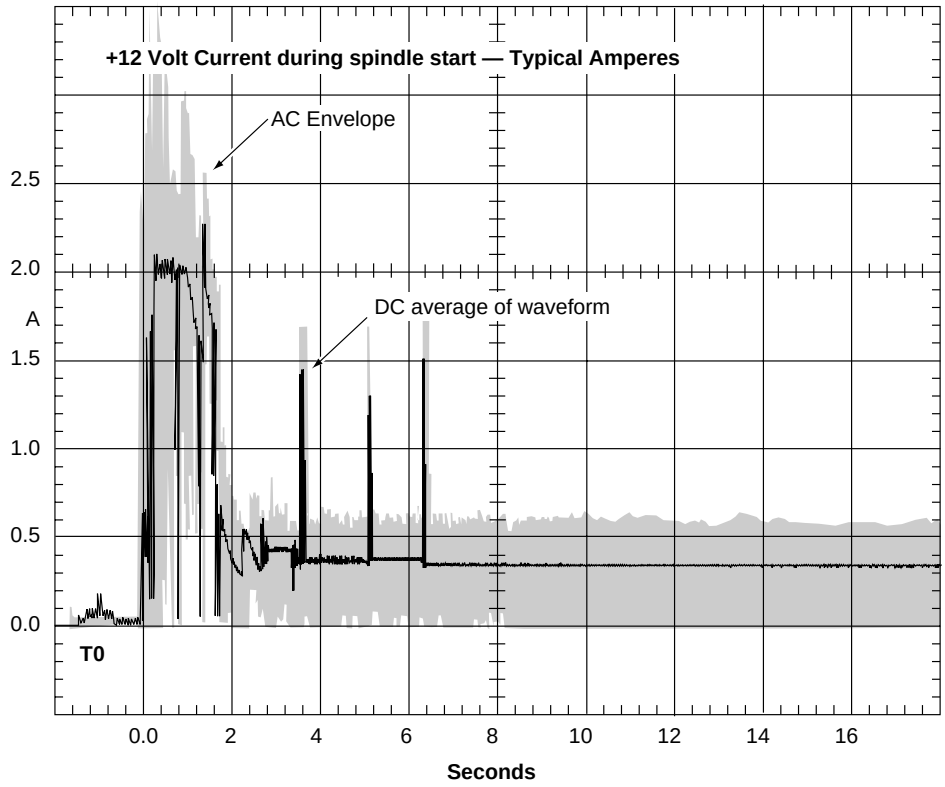

Figure 2. Typical ST336938/ST336918/ST318438/ST318418 drive +12 V current profile

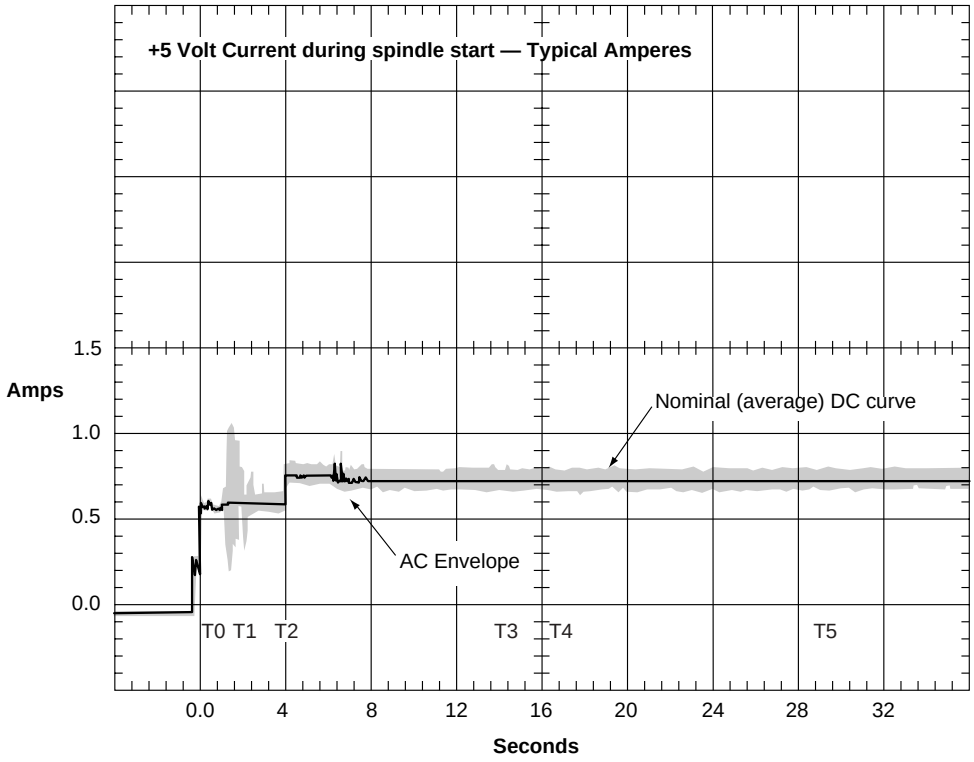

Figure 3. Typical ST336938/ST336918/ST318438/ST318418 drive +5 V current profile

6.3 Power dissipation

ST336938/ST318438

The drives typical power dissipation under idle conditions is 8.0 watts (27.3 BTUs per hour).

To obtain operating power for typical random read operations, refer to the following I/O rate curve (see Figure 4). Locate the typical I/O rate for a drive in your system on the horizontal axis and read the corresponding +5 volt current, +12 volt current, and total watts on the vertical axis. To calculate BTUs per hour, multiply watts by 3.4123.

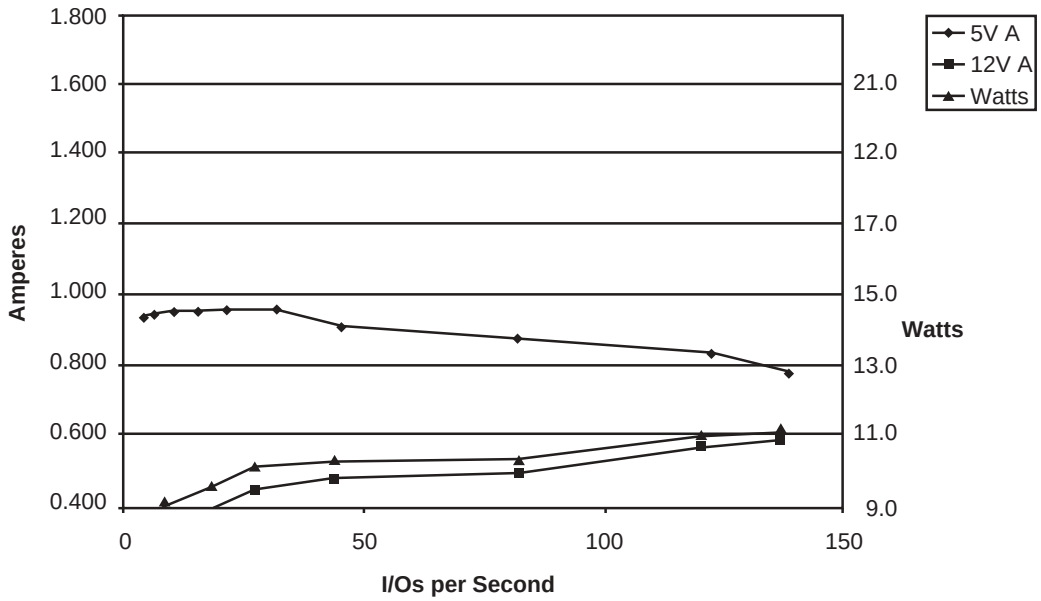

Figure 4. ST336938/ST318438 DC current and power vs. input/output operations per second (LVD)

ST336918/ST318418

The drives typical power dissipation under idle conditions is 8.0 watts (27.3 BTUs per hour).

To obtain operating power for typical random read operations, refer to the following two I/O rate curves (see Figures 5). Locate the typical I/O rate for a drive in your system on the horizontal axis and read the corresponding +5 volt current, +12 volt current, and total watts on the vertical axis. To calculate BTUs per hour, multiply watts by 3.4123.

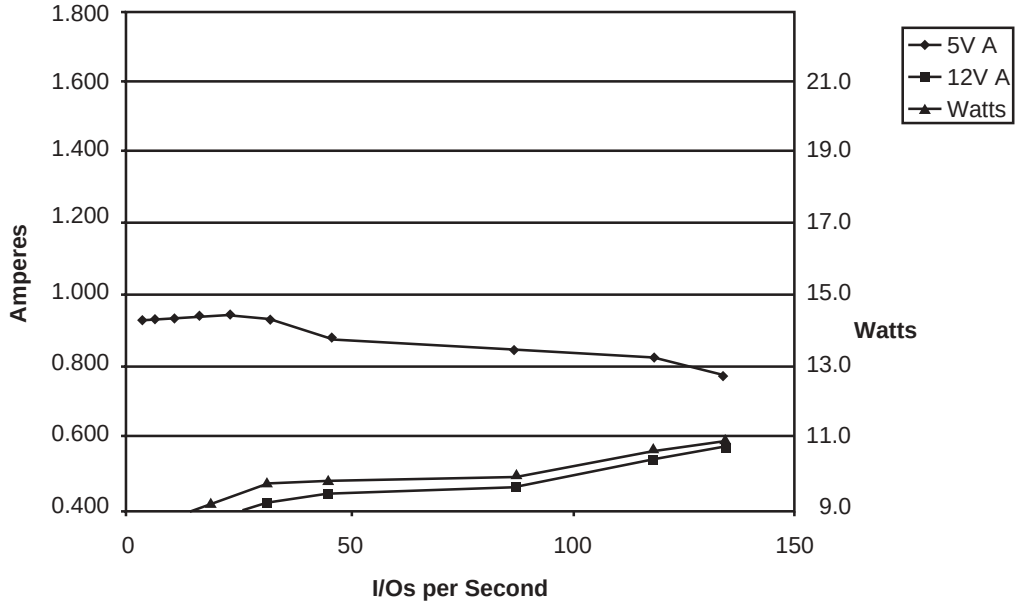

Figure 5. ST336918/ST318418 DC current and power vs. input/output operations per second (SE)

6.4 Environmental limits

Temperature and humidity values experienced by the drive must be such that condensation does not occur on any drive part. Altitude and atmospheric pressure specifications are referenced to a standard day at 58.7°F (14.8°C). Maximum wet bulb temperature is 86°F (30°C).

6.4.1 Temperature

a. Operating

With cooling designed to maintain the case temperature, the drive meets all specifications over a 41°F to 131°F (5°C to 55°C) drive ambient temperature range with a maximum temperature gradient of 36°F (20°C) per hour. The enclosure for the drive should be designed such that the temperature at the location specified in Note [3] is not exceeded. Air flow may be needed to achieve these temperature values (see Note [1]). Operation at case temperatures above these values may adversely affect the drives ability to meet specifications.

The MTBF specification for the drive is based on operating in an environment that ensures that the case temperature is not exceeded. Occasional excursions to drive ambient temperatures of 131°F (55°C) or 41°F (5°C) may occur without impact to specified MTBF. Air flow may be needed to achieve these temperatures (see Note [1]). The maximum allowable continuous or sustained temperature for rated MTBF is 113°F (45°C).

To confirm that the required cooling for the drive is provided, place the drive in its final mechanical configuration, perform random write/read operations. After the temperatures stabilize, measure the case temperature of the HDA (see Note [3]).

The maximum allowable HDA case temperature is 50°C. Operation of the drive at the maximum case temperature is intended for short time periods only. Continuous operation at the elevated temperatures will reduce product reliability.

Notes.

[1] Section 8.2.1 describes the air-flow patterns to be used to meet HDA temperature. Air flow was opposite that shown in Section 8.2.1. Air velocity should be adequate to ensure that the HDA temperature is not exceeded during drive operation.

[2] The temperatures in columns 1 and 2 are calculated and may not reflect actual operating values. Sufficient cooling is required to ensure that these values are not exceeded.

[3] Measure HDA temp at point labeled “HDA Temp. Check Point” on Figure 6.

b. Non-operating

–40° to 163°F (–40° to 70°C) package ambient with a maximum gradient of 36°F (20°C) per hour. This specification assumes that the drive is packaged in the shipping container designed by Seagate for use with drive.

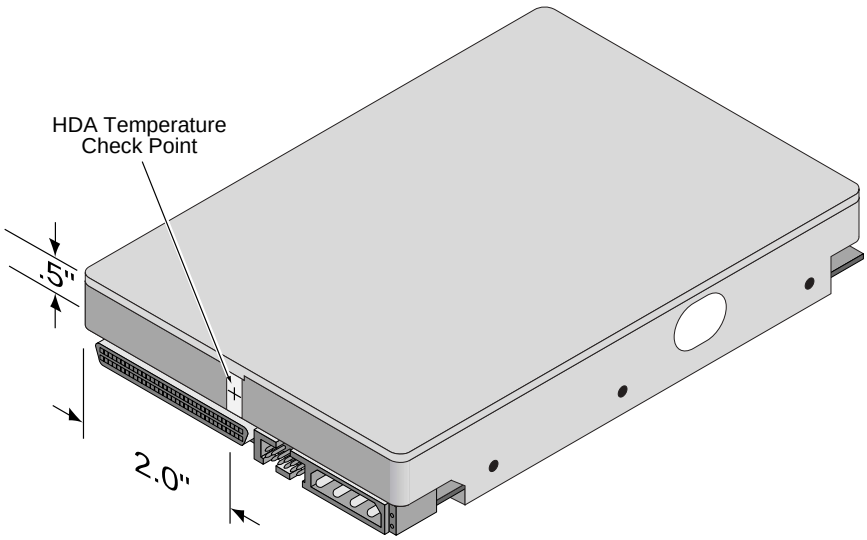

Figure 6. Location of HDA Temperature Check Point

6.4.2 Relative humidity

The values below assume that no condensation on the drive occurs.

a. Operating

5% to 90% non-condensing relative humidity with a maximum gradient of 30% per hour.

b. Non-operating

5% to 95% non-condensing relative humidity.

6.4.3 Effective altitude (sea level)

a. Operating

–1000 to +10,000 feet (–305 to +3,048 meters)

b. Non-operating

–1000 to +40,000 feet (–305 to +12,210 meters)

6.4.4 Shock and vibration

Shock and vibration limits specified in this document are measured directly on the drive chassis. If the drive is installed in an enclosure to which the stated shock and/or vibration criteria is applied, resonances may occur internally to the enclosure resulting in drive movement in excess of the stated limits. If this situation is apparent, it may be necessary to modify the enclosure to minimize drive movement.

The limits of shock and vibration defined within this document are specified with the drive mounted by any of the four methods shown in Figure 7, and in accordance with the restrictions of Section 8.3. Orientation of the side nearest the LED may be up or down.

6.4.4.1 Shock

a. Operating—normal

The drive, as installed for normal operation, shall operate error free while subjected to intermittent shock not exceeding 63 Gs at a maximum duration of 2 msec (half sinewave). Shock may be applied in the X, Y, or Z axis.

b. Non-operating

The limits of non-operating shock shall apply to all conditions of handling and transportation. This includes both isolated drives and integrated drives.

The drive subjected to non-repetitive shock not exceeding 200 Gs at a maximum duration of 2 msec (half sinewave) does not exhibit device damage or performance degradation. Shock may be applied in the X, Y, or Z axis.

The drive subjected to a single-event shock not exceeding 350 Gs at a maximum duration of 2 msec (half sinewave) does not exhibit device damage or performance degradation. Shock may be applied in the X, Y, or Z axis.

c. Packaged

Disc drives shipped as loose load (not palletized) general freight will be packaged to withstand drops from heights as defined in the table below. For additional details refer to Seagate specifications 30190-001 (under 100 lbs/45 kg) or 30191-001 (over 100 lbs/45 Kg).

Package size	Packaged/product weight	Drop height
<600 cu in (<9,800 cu cm)	Any	60 in (1524 mm)
600-1800 cu in (9,800-19,700 cu cm)	0-20 lb (0 to 9.1 kg)	48 in (1219 mm)
>1800 cu in (>19,700 cu cm)	0-20 lb (0 to 9.1 kg)	42 in (1067 mm)
>600 cu in (>9,800 cu cm)	20-40 lb (9.1 to 18.1 kg)	36 in (914 mm)

Drives packaged in single or multipacks with a gross weight of 20 pounds (8.95 kg) or less by Seagate for general freight shipment shall withstand a drop test from 48 inches (1,070 mm) against a concrete floor or equivalent.

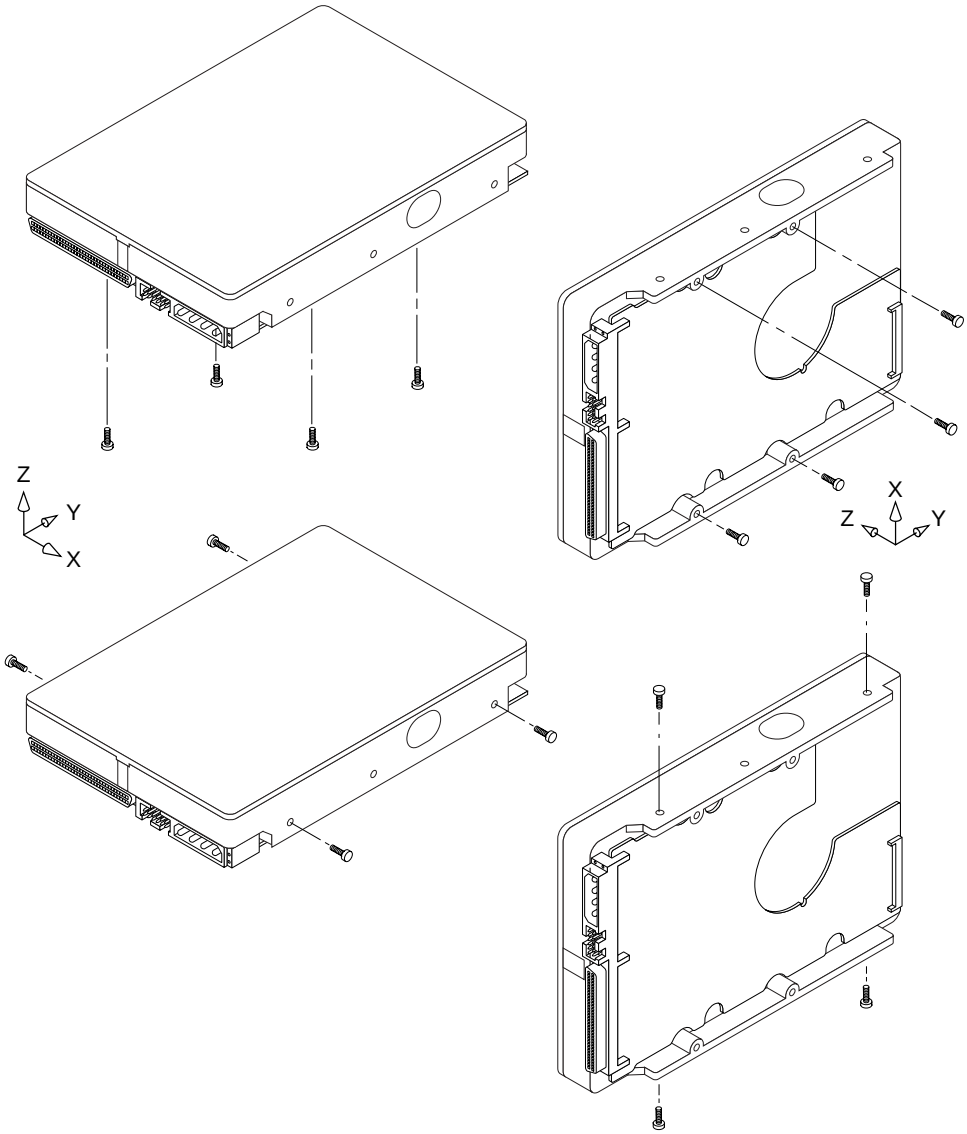

Figure 7. Recommended mounting

6.4.4.2 Vibration

a. Operating—Normal

The drive as installed for normal operation, shall comply with the complete specified performance while subjected to continuous vibration not exceeding

5-300 Hz @ 0.008 g2/Hz PSD

Vibration may be applied in the X, Y, or Z axis.

b. Operating—Abnormal

Equipment as installed for normal operation shall not incur physical damage while subjected to periodic vibration not exceeding:

22-350 Hz @ 0.5 G (zero to peak)

Vibration may be applied in the X, Y, or Z axis.

Vibration occurring at these levels may degrade operational performance during the abnormal vibration period. Specified operational performance will continue when normal operating vibration levels are resumed. This assumes system recovery routines are available.

c. Non-operating

The limits of non-operating vibration shall apply to all conditions of handling and transportation. This includes both isolated drives and integrated drives.

The drive shall not incur physical damage or degraded performance as a result of continuous vibration not exceeding

22-350 Hz @ 5.0 G (zero to peak)

Vibration may be applied in the X, Y, or Z axis.

6.4.5 Air cleanliness

The drive is designed to operate in a typical office environment with minimal environmental control.

6.4.6 Acoustics

Sound power during idle mode shall be 2.0 bels typical when measured to ISO 7779 specification.

There will not be any discrete tones more than 10 dB above the masking noise on typical drives when measured according to Seagate specification 30553-001. There will not be any tones more than 24 dB above the masking noise on any drive.

6.4.7 Electromagnetic susceptibility

See Section 2.1.2.

6.5 Mechanical specifications

The following nominal dimensions are exclusive of the decorative front panel accessory. However, dimensions of the front panel are shown in figure below. Refer to Figures 8 and 9 for detailed mounting configuration dimensions. See Section 8.3, “Drive mounting.”

Height:	1.000 in	25.40 mm
Width:	4.000 in	101.60 mm
Depth:	5.75 in	146.05 mm
Weight:	1.2 pounds (ST336938)	0.54 kilograms

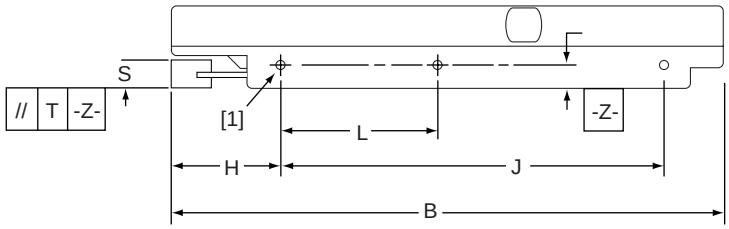

Notes:

[1] Mounting holes are 6-32 UNC 2B, three on each side and four on the bottom. Max screw penetration into side of drive is 0.15 in. (3.81 mm). Max screw tightening torque is 6.0 in-lb (3.32 nm) with minimum full thread engagement of 0.12 in. (3.05 mm).

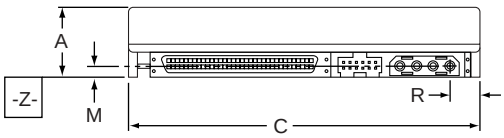

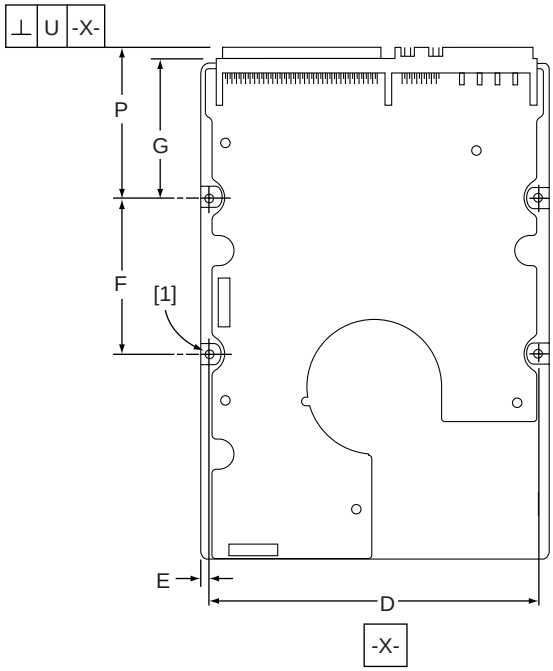

Dimension Table

	Inches	Millimeters
A	1.028 max	26.10 max
B	5.787 max	147.00 max
C	4.000 – .010	101.60 – .25
D	3.750 – .010	95.25 – .25
E	.125 – .010	3.18 – .25
F	1.750 – .010	44.45 – .25
G	1.625 – .020	41.28 – .50
H	1.122 – .020	28.50 – .50
J	4.000 – .010	101.60 – .25
K	.250 – .010	6.35 – .25
L	1.638 – .010	41.60 – .25
M	.181 – .020	4.60 – .50
P	1.625 – .020	41.28 – .50
R	.265 – .010	6.73 – .25
S	.315 – .040	8.00 – 1.02
T	.015 max	0.38 max
U	.015 max	0.38 max

Figure 8. LW mounting configuration dimensions

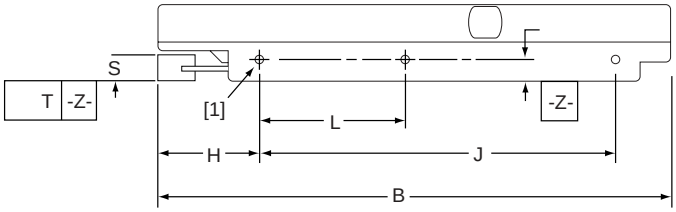

Notes:

[1] Mounting holes are 6-32 UNC 2B, three on each side and four on the bottom. Max screw penetration into side of drive is 0.15 in. (3.81 mm). Max screw tightening torque is 6.0 in-lb (3.32 nm) with minimum full thread engagement of 0.12 in. (3.05 mm).

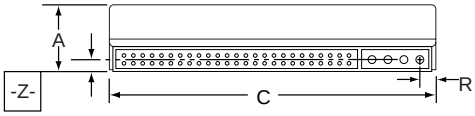

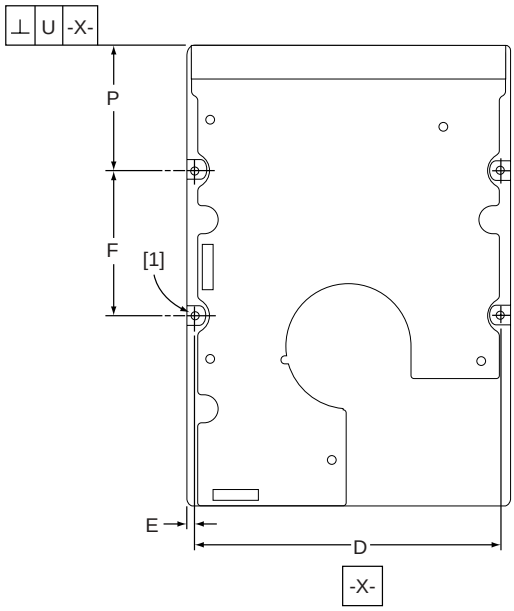

Dimension Table

	Inches	Millimeters
A	1.028 max	26.10 max
B	5.787 max	147.00 max
C	4.000 – .010	101.60 – .25
D	3.750 – .010	95.25 – .25
E	.125 – .010	3.18 – .25
F	1.750 – .010	44.45 – .25
H	1.122 – .020	28.50 – .50
J	4.000 – .010	101.60 – .25
K	.250 – .010	6.35 – .25
L	1.638 – .010	41.60 – .25
P	1.625 – .020	41.28 – .50
R	.265 – .010	6.73 – .25
S	.335 – .010	8.50 – .25
T	.015 max	0.38 max
U	.015 max	0.38 max

Figure 9. N mounting configuration dimensions

7.0 Defect and error management

The drive, as delivered, complies with this specification. The read error rate and specified storage capacity are not dependent upon use of defect management routines by the host (initiator).

Defect and error management in the SCSI system involves the drive internal defect/error management and SCSI systems error considerations (errors in communications between Initiator and the drive). Tools for use in designing a defect/error management plan are briefly outlined in this section, with references to other sections where further details are given.

7.1 Drive internal defects

During the initial drive format operation at the factory, media defects are identified, tagged as being unusable, and their locations recorded on the drive primary defects list (referred to as the “P” list and also as the ETF defect list). At factory format time, these known defects are also reallocated, that is, reassigned to a new place on the medium and the location listed in the defects reallocation table. The “P” list is not altered after factory formatting. Locations of defects found and reallocated during error recovery procedures after drive shipment are listed in the “G” list (defects growth list). The “P” and “G” lists may be referenced by the initiator using the Read Defect Data command (see the *SCSI Interface Product Manual,* part number 75789509).

7.2 Drive error recovery procedures

Whenever an error occurs during drive operation, the drive, if programmed to do so, performs error recovery procedures to attempt to recover the data. The error recovery procedures used depend on the options previously set up in the error recovery parameters mode page. Error recovery and defect management may involve the use of several SCSI commands, the details of which are described in the *SCSI Interface Product Manual.* The drive implements selectable error recovery time limits such as are required in video applications. For additional information on this, refer to the Error Recovery Page table in the *SCSI Interface Product Manual*, which describes the Mode Select/Mode Sense Error Recovery parameters.

The error recovery scheme supported by the drive provides a means to control the total error recovery time for the entire command in addition to controlling the recovery level for a single LBA. The total amount of time spent in error recovery for a command can be limited via the Recovery Time Limit bytes in the Error Recovery Mode Page. The total amount of time spent in error recovery for a single LBA can be limited via the Read Retry Count or Write Retry Count bytes in the Error Recovery Mode Page.

The drive firmware error recovery algorithms consist of 11 levels for read recoveries and 15 levels for writes.

Table 3 equates the Read and Write Retry Count with the maximum possible recovery time for read and write recovery of individual LBAs. The times given do not include time taken to perform reallocations, if reallocations are performed. Reallocations are performed when the ARRE bit (for reads) or AWRE bit (for writes) is one, the RC bit is zero, and the Recovery Time Limit for the command has not yet been met. Time needed to perform reallocation is not counted against the Recovery Time Limit.

The Read Continuous (RC) bit, when set to one, requests the disc drive to transfer the requested data length without adding delays (for retries or ECC correction) that may be required to insure data integrity. The disc drive may send erroneous data in order to maintain the continuous flow of data. The RC bit should only be used when data integrity is not a concern and speed is of utmost importance. If the Recovery Time Limit or retry count is reached during error recovery, the state of the RC bit is examined. If the RC bit is set, the drive will transfer the unrecovered data with no error indication and continue to execute the remaining command. If the RC bit is not set, the drive will stop data transfer with the last good LBA, and report a “Check Condition, Unrecovered Read Error.”

Table 3: Read and write retry count maximum recovery times [1]

Read retry count [1]	Maximum recovery time per LBA (cumulative, msec)
0	108.29
1	124.95
2	424.83
3	458.15
4	516.46
5	583.10
6	741.37
7	857.99
8	891.31
9	966.28
10	1049.58
11 (default)	2782.22

Write retry count	Maximum recovery time per LBA (cumulative, msec)
0	91.63
1	116.62
2	141.61
3	166.60
4	224.91
5	283.22
6	449.82
7	474.81
8	516.46
9	541.45
10	2640.61
11	2665.60
12	2690.59
13	2715.58
14	2773.89
15 (default)	2832.20

[1] These values are subject to change.

Setting these retry counts to a value below the default setting could result in an increased unrecovered error rate which may exceed the value given in this product manual. A setting of zero (0) will result in the drive not performing error recovery.

For example, suppose the Read/Write Recovery page has the RC bit set to 0, read retry count set to 4, and the recovery time limit field (Mode Sense page 01, bytes 10 and 11) set to FF FF hex (maximum). A four LBA Read command is allowed to take up to 516.46 msec recovery time for each of the four LBAs in the command. If the recovery time limit is set to 00 C8 hex (200 msec decimal) a four LBA read command is allowed to take up to 200 msec for all error recovery within that command. The use of the Recovery Time Limit field allows finer granularity on control of the time spent in error recovery. The recovery time limit only starts counting when the drive is executing error recovery and it restarts on each command. Therefore, each command's total recovery time is subject to the recovery time limit. Note: A recovery time limit of 0 will use the drive's default value of FF FF. Minimum recovery time limit is achieved by setting the Recovery Time Limit field to 00 01.

7.3 SCSI systems errors

Information on the reporting of operational errors or faults across the interface is given in the *SCSI Interface Product Manual,* part number 75789509. Message Protocol System is described in the *SCSI Interface Product Manual*. Several of the messages are used in the SCSI systems error management system. The Request Sense command returns information to the host about numerous kinds of errors or faults. The Receive Diagnostic Results reports the results of diagnostic operations performed by the drive.

Status returned by the drive to the Initiator is described in the *SCSI Interface Product Manual*. Status reporting plays a role in the SCSI systems error management and its use in that respect is described in sections where the various commands are discussed.

8.0 Installation

Note. These drives are designed to be used only on single-ended (SE) or low voltage differential (LVD) busses. Do not install these drives on a high voltage differential (HVD) bus.

The first thing to do when installing a drive is to set the drive SCSI ID and set up certain operating options. This is usually done by installing small shorting jumpers on the pins of connectors J2 and J6 on the PCBA (or J1-Auxiliary on the LW model). Some users connect cables to J6 or J5-Auxiliary and perform the set-up using remote switches.

Configure drive options

For option jumper locations and definitions refer to Figures 10, 12, and 13. Drive default mode parameters are not normally needed for installation. Refer to Section 9.3.2 for default mode parameters if they are needed.

- Ensure that the SCSI ID of the drive is not the same as the host adapter. Most host adapters use SCSI ID 7 because ID 7 is the highest priority on both 8 and 16 bit data buses.
- If multiple devices are on the bus set the drive SCSI ID to one that is not presently used by other devices on the bus.
- If the drive is the only device on the bus, attach it to the end of the SCSI bus cable. The user, system integrator, or host equipment manufacturer must provide external terminators.

Note. For additional information about terminator requirements, refer to Sections 9.8 and 9.9.

- Set all appropriate option jumpers for desired operation prior to power on. If jumpers are changed after power has been applied, recycle the drive power to make the new settings effective.
- Installation instructions are provided by host system documentation or with any additionally purchased drive installation software. If necessary see Section 10 for Seagate support services telephone numbers.
- Do not remove the manufacturer's installed labels from the drive and do not cover with additional labels, as the manufacturer labels contain information required when servicing the product.

Formatting

- It is not necessary to low level format this drive. The drive is shipped from the factory low level formatted in 512 byte sectors.
- Reformat the drive if a different spare sector allocation scheme is selected.
- High level formatting the drive involves assigning one or more partitions or logical drives to the drive volume. Follow the instructions in the system manuals for the system into which the drive is to be installed.

8.1 Drive ID/option select header

Figures 10 through 12 show views of the drive ID select jumper connectors. Figures 13 and 14 show the J2 option select jumper connectors for all models. Figure 12 shows the drive's J5-Auxiliary jumper connector. Both J5-Auxiliary and J6 have pins for selecting drive ID and for connecting the remote LED cable. Only one or the other should be used, although using both at the same time would not damage the drive. The notes following the figures describe the functions of the various jumper positions on the connectors J2, J5-Auxiliary and J6. Suggested part number for the jumpers used on J2 is Molex 52747-0211 (Seagate part number 77679052). A bag with the two jumper plug types is shipped with the standard OEM drives.

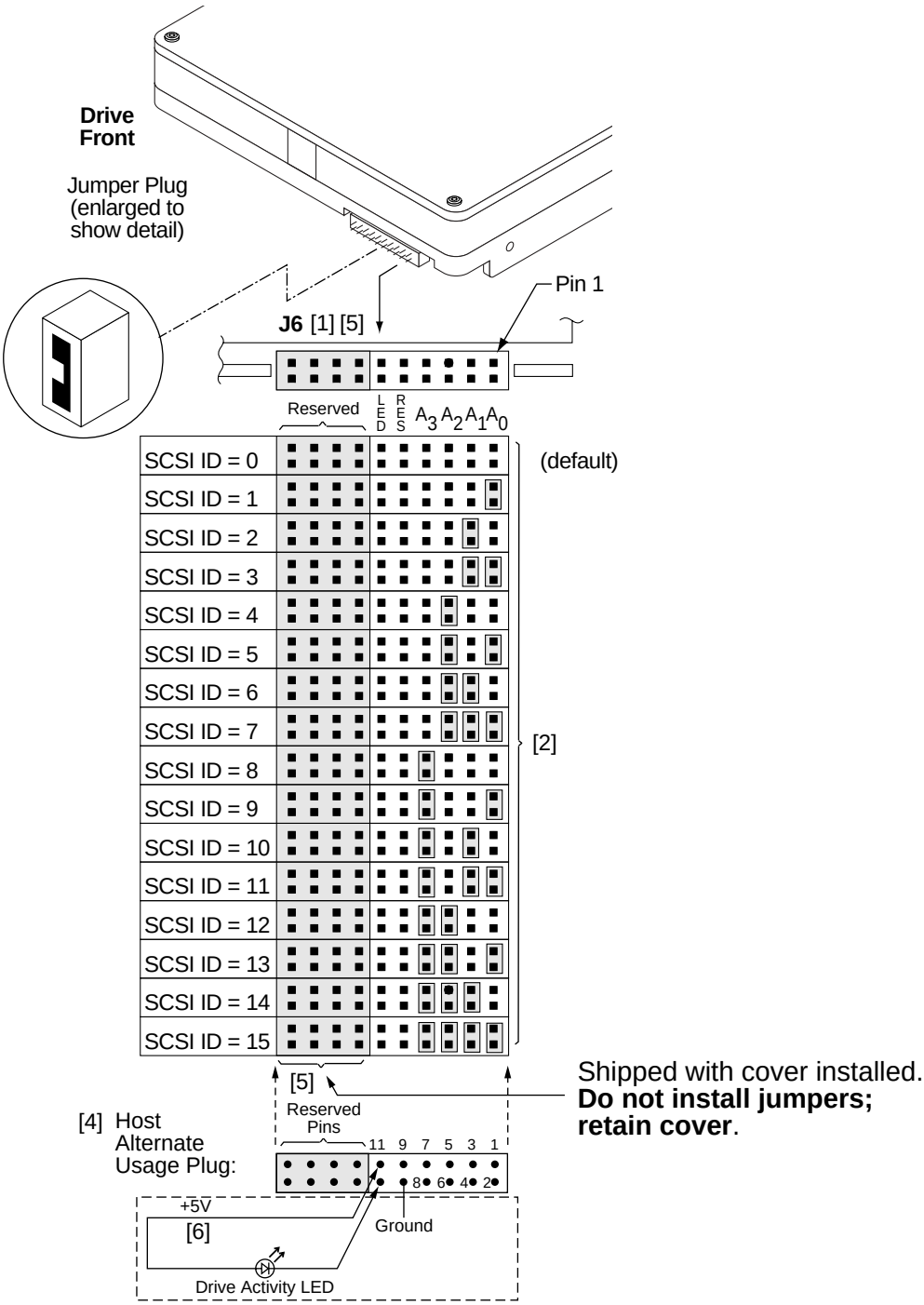

[4] Dashed area is optional host circuitry (external to the drive) connected to host supplied optional usage plug.
[5] **Do not connect anything to pins 13-20.**

Figure 10. J6 jumper header for LW models

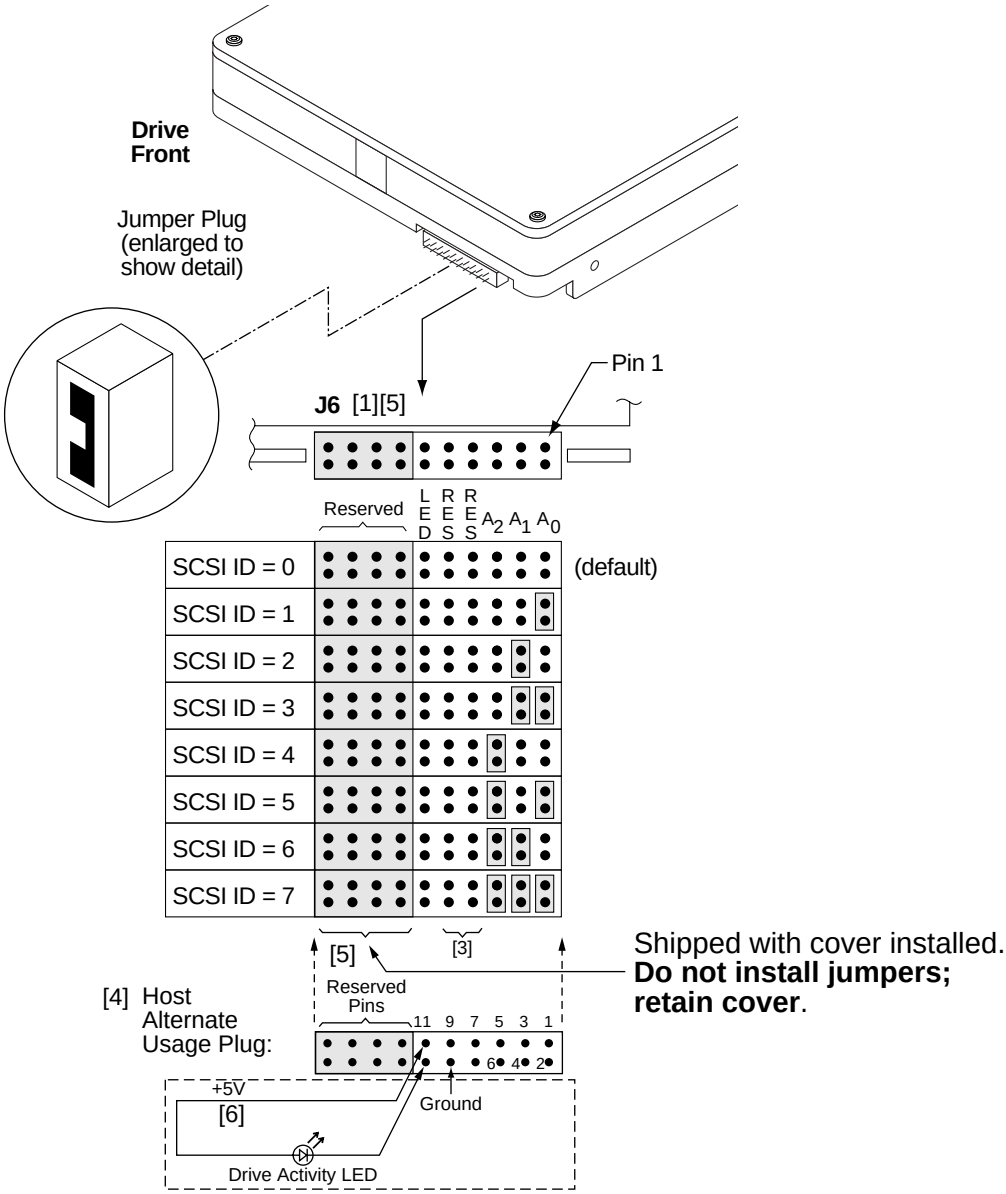

[4] Dashed area is optional host circuitry (external to the drive) connected to host supplied optional usage plug.
[5] **Do not connect anything to pins 13-20.**

Figure 11. J6 jumper header for N model

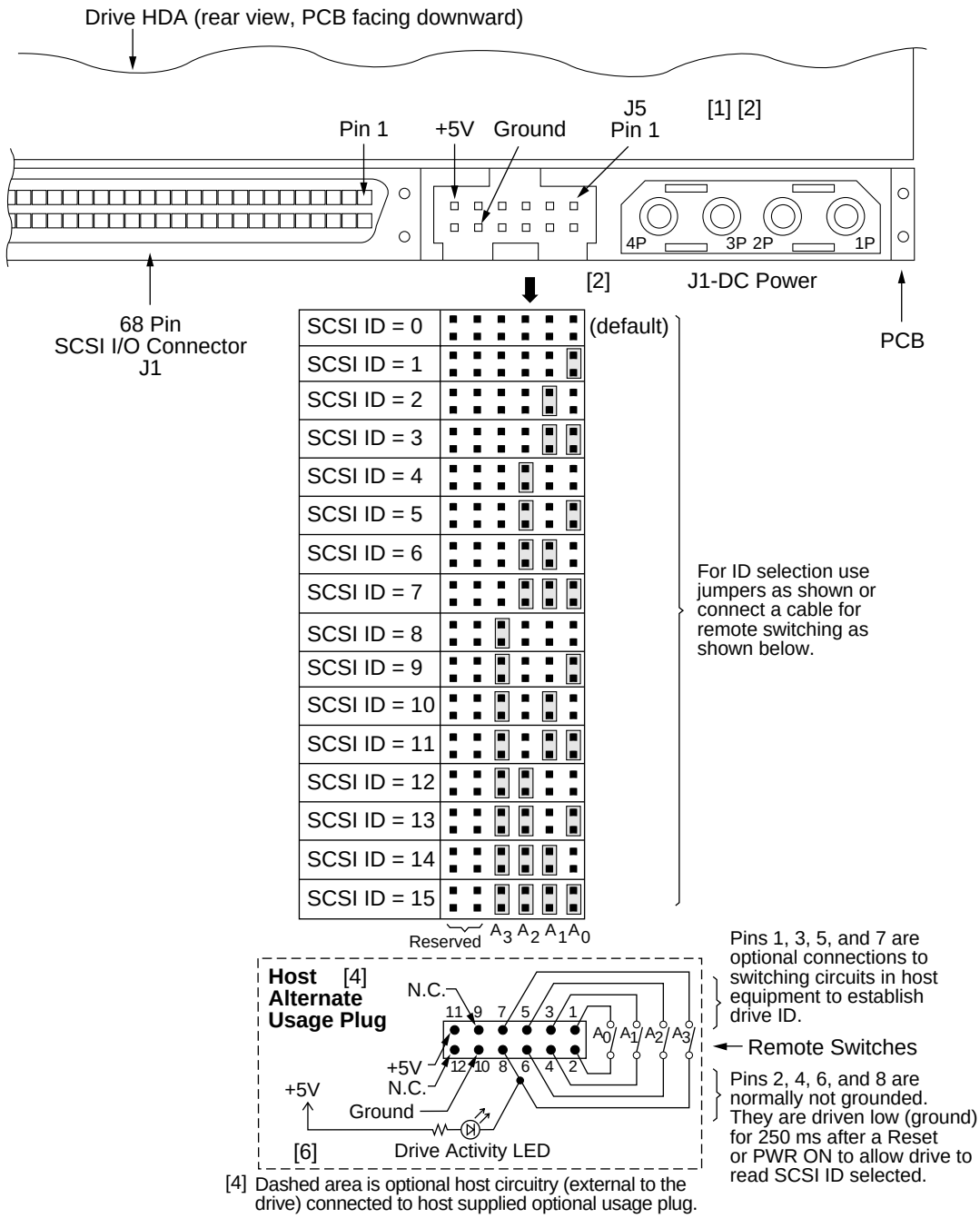

Figure 12. J5 jumper header (on LW models only)

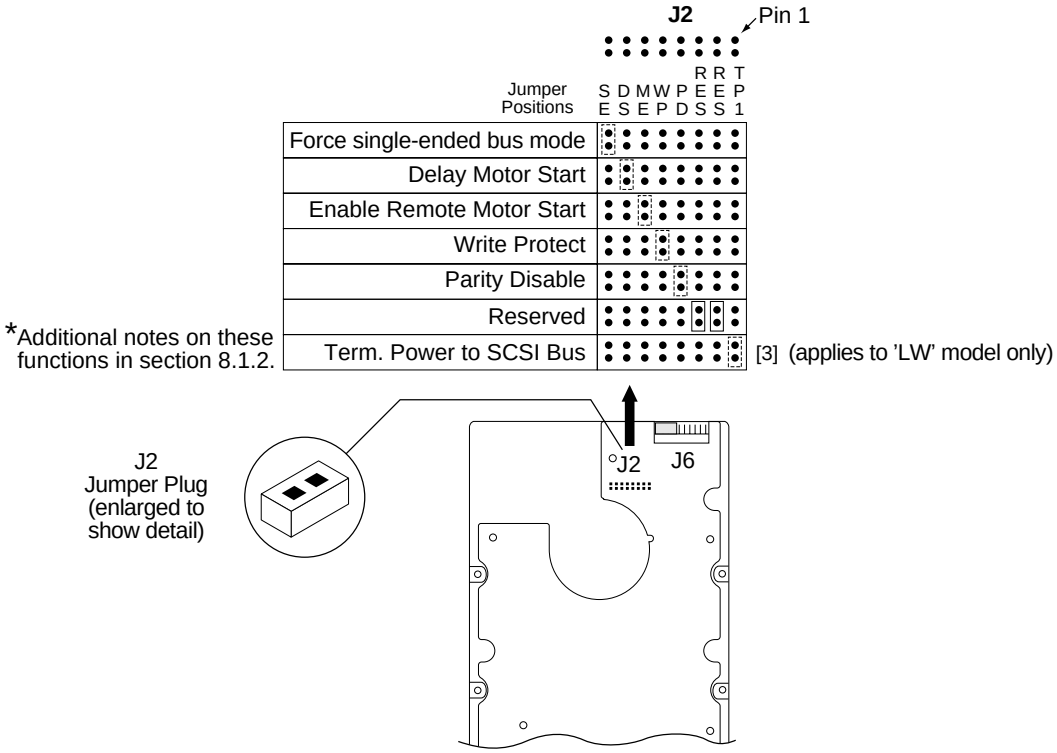

Figure 13. J2 option select header (for LW models)

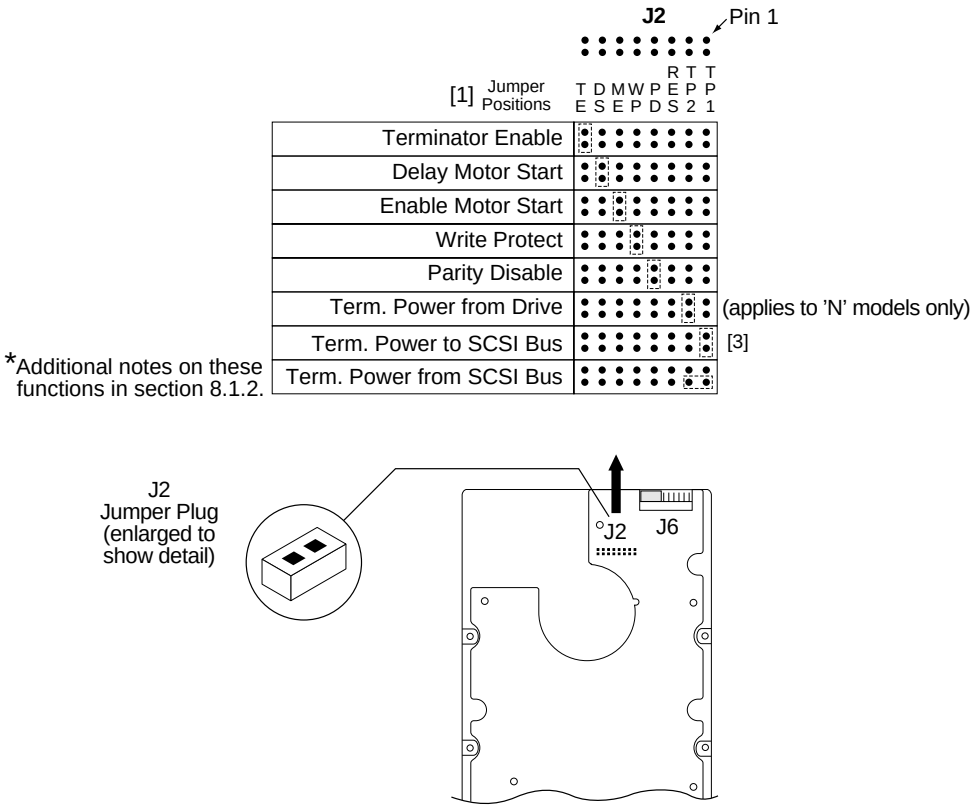

Figure 14. J2 option select header (for N models)

8.1.1 Notes for Figures 14 through 18

[1] Notes explaining the functions of the various jumpers on jumper header connectors J2, J5, and J6 are given here and in Section 8.1.2. The term “**default**” means as standard OEM units are configured with a jumper on those positions when shipped from factory. “Off” means no jumper is installed; “On” means a jumper is installed. OFF or ON underlined is factory **default** condition.

The PCBA on LC models does not have connector J5. The J5 connector signals conform to SFF-8009 Revision 2.0, Unitized Connector for Cabled Drives, signal assignments for auxiliary connectors.

[2] These signals are also on J1 I/O connector (J5, Pins 1-12). See Figure 12.

[3] Voltage supplied by the drive.

[4] Dashed area is optional host circuitry (external to the drive) connected to host supplied optional usage plug.

[5] Do not connect anything to J5 pins 9 and 12 or J6 pins 13-20.

[6] Connect an external Drive Activity LED to J6 pins 11 and 12 (see figures 10 and 11), or to J5 pin 8 (see Figure 12) and the drives +5V power source, through an appropriately sized current limiting resistor. The drive provides an internal 150 ohm current limiting resistor for the J6 connection.

8.1.2 Function description

J2 jumper installation		Jumper function description
TE (Applies only to the N models)		
On		With the jumper installed, the onboard (non-removable) terminator circuits are enabled (connected to the I/O lines). **Default** is jumper installed.
Off		Terminator circuits not enabled (not connected to I/O lines).
SE (Applies only to the LW model)		
On		Forces drive to use single-ended I/O drivers/receivers only.
Off		Drive can operate on the interface in low voltage differential mode or single-ended, depending on the voltage state of the I/O “DIFFSNS” line. **Default** is **SE** jumper not installed.
DS	**ME**	
Off	Off	Spindle starts immediately after power up—**Default** setting.
Off	On	Drive spindle does not start until Start Unit command received from host.
On	Off	Spindle Startup is delayed by SCSI ID times12 seconds after power is applied, i.e., drive 0 spindle starts immediately when DC power connected, drive 1 starts after 12 second delay, drive 2 starts after 24 second delay, etc.
On	On	Drive spindle starts when Start Unit command received from host. Delayed start feature is overridden and does not apply when **ME** jumper is installed.
WP		
On		Entire drive is write protected.
Off		Drive is not write protected. **Default** is **WP** jumper not installed.
PD		
On		Parity checking and parity error reporting by the drive is disabled.
Off		Drive checks for parity and reports result of parity checking to host. **Default** is **PD** jumper not installed.
TP1 (Applies only to the LW and N models)		
Off		No terminator power is connected to SCSI bus I/O cable [1]. No jumpers on is factory **default.**
On		Drive supplies power to SCSI bus I/O cable [1]. A jumper on the **TP1** position may be needed to power external terminators (see Section 9.8 and Figure 21).
TP2 (Applies only to the N models)		
On		Connects terminator power to the drive’s internal terminators [2] (for single-ended I/O only). **Default** is jumper installed.
Off		No power is connected to the drives internal terminators.

[1] See Figure 13 for pins used for Termpower.
[2] See Figure 14 for pins used for Termpower.

8.1.3 Drive orientation

The balanced rotary arm actuator design of the drive allows it to be mounted in any orientation. All drive performance characterization, however, has been done with the drive in horizontal (discs level) and vertical (drive on its side) orientations, and these are the two preferred mounting orientations.

8.2 Cooling

Cabinet cooling must be designed by the customer so that the ambient temperature immediately surrounding the drive will not exceed temperature conditions specified in Section 6.4.1, “Temperature.” Specific consideration should be given to make sure adequate air circulation is present around the printed circuit board (PCB) to meet the requirements of Section 6.4.1, “Temperature.”

8.2.1 Air flow

The rack, cabinet, or drawer environment for the drive must provide heat removal from the electronics and head and disc assembly (HDA). You should confirm that adequate heat removal is provided using the temperature measurement guidelines described in Section 6.4.1.

Forced air flow may be required to keep temperatures at or below the specified case temperatures, in which case the drive should be oriented, or air flow directed, so that the least amount of air flow resistance is created while providing air flow to the electronics and HDA. Also, the shortest possible path between the air inlet and exit should be chosen to minimize the travel length of air heated by the drive and other heat sources within the rack, cabinet, or drawer environment.

If forced air is determined to be necessary, possible air-flow patterns are shown in Figure 15. The air-flow patterns are created by one or more fans, either forcing or drawing air as shown in the illustrations. Conduction, convection, or other forced air-flow patterns are acceptable as long as the temperature measurement guidelines of Section 6.4.1 are met.

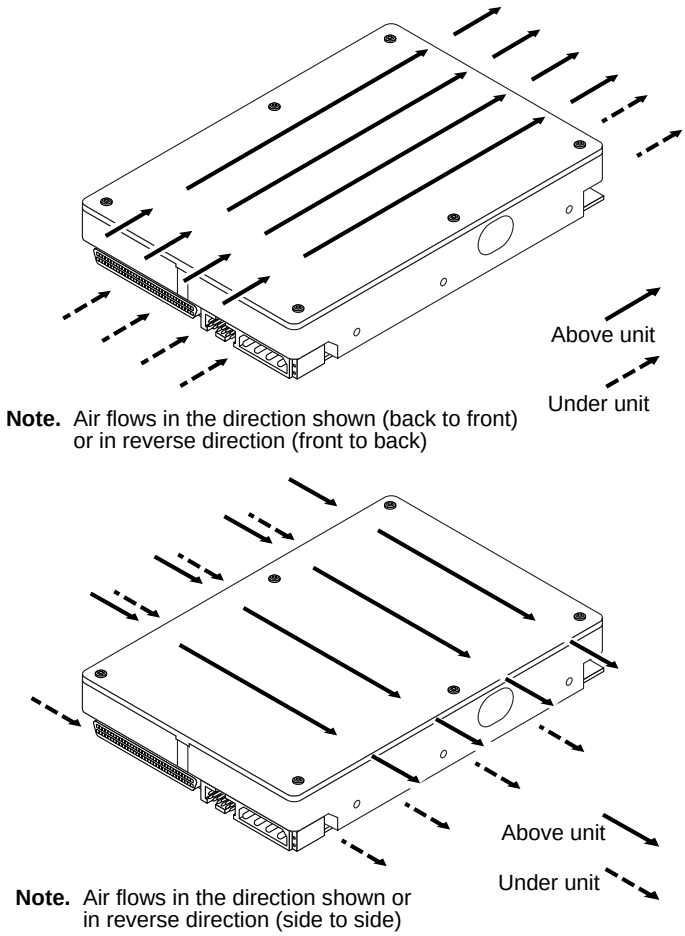

Figure 15. Air flow (suggested)

8.3 Drive mounting

When mounting the drive using the bottom holes (x-y plane in Figure 7) care must be taken to ensure that the drive is not physically distorted due to a stiff non-flat mounting surface. The allowable mounting surface stiffness is 80 lb/in (14.0 N/mm). The following equation and paragraph define the allowable mounting surface stiffness:

$$k * x = F \leq 15\text{lb} = 67\text{N}$$

where ‘k’ represents the mounting surface stiffness (units of lb/in or N/mm), and ‘x’ represents the out-of-plane mounting surface distortion (units of inches or millimeters). The out-of-plane distortion (‘x’) is determined by defining a plane with three of the four mounting points fixed and evaluating the out-of-plane deflection of the fourth mounting point when a known force (F) is applied to the fourth point.

Note. Before mounting the drive in any kind of 3.5-inch to 5.25-inch adapter frame, verify with Seagate Technology that the drive can meet the shock and vibration specifications given herein while mounted in such an adapter frame. Adapter frames that are available may not have a mechanical structure capable of mounting the drive so that it can meet the shock and vibration specifications listed in this manual.

8.4 Grounding

Signal ground (PCBA) and HDA ground are connected together in the drive and cannot be separated by the user. The equipment in which the drive is mounted is connected directly to the HDA and PCBA with no electrically isolating shock mounts. If it is desired for the system chassis to not be connected to the HDA/PCBA ground, the systems integrator or user must provide a nonconductive (electrically isolating) method of mounting the drive in the host equipment.

Increased radiated emissions may result if you do not provide the maximum surface area ground connection between system ground and drive ground. This is the system designer’s and integrator’s responsibility.

9.0 Interface requirements

This section partially describes the interface requirements as implemented on the drives.

9.1 General description

This section describes in essentially general terms the interface requirements supported by the Barracuda 36ES2. No attempt is made to describe all of the minute details of conditions and constraints that must be considered by designers when designing a system in which this family of drives can properly operate. Seagate declares that the drives operate in accordance with the appropriate ANSI Standards referenced in various places herein, with exceptions as noted herein or in the Seagate *SCSI Interface Product Manual*, part number 75789509.

9.2 SCSI interface messages supported

Table 4 lists the messages supported by the SCSI-2 and SCSI-3 modes of the Barracuda 36ES2 family drives.

Table 4: SCSI messages supported by Barracuda 36ES2 family drives

Message name	Message code	Supported by SCSI-2/3
Abort	06h	Y
Abort-tag	0Dh	Y
Bus device reset	0Ch	Y
Clear ACA	16h	N
Clear queue	0Eh	Y
Command complete	00h	Y
Continue I/O process	12h	Y
Disconnect	04h	Y
Extended messages	01h[1]	Y
Identify	80h-FFh	Y
Ignore wide residue (two bytes)	23h	Y
Initiate recovery	0Fh	N
Initiator detected error	05h	Y
Linked command complete	0Ah	Y
Linked command complete with flag	0Bh	Y
Message parity error	09h	Y
Message reject	07h	Y
Modify data pointer	[1]	N
No operation	08h	Y
Parallel Protocol Request	[1] [2]	Y
Queue tag messages (two bytes)		
ACA	24h	N
Head of queue tag	21h	Y
Ordered queue tag	22h	Y
Simple queue tag	20h	Y
Release recovery	10h	N
Restore pointers	03h	Y
Save data pointer	02h	Y
Synchronous data transfer req.	[1]	Y
Target transfer disable	13h	Y
Terminate I/O process	11h	N
Wide data transfer request	[1]	Y

Notes.

[1] Extended messages (see the *SCSI Interface Product Manual,* part number 75789509).

[2] Supports all options except qas_req and iu_req.

9.3 SCSI interface commands supported

Table 5 following lists the SCSI interface commands that are supported by the drive. Barracuda 36ES2 Family drives can be changed back and forth between SCSI-1, SCSI-2, and SCSI-3 (Ultra160) modes using the Change Definition Command. OEM standard drives are shipped set to operate in Ultra160 mode.

Table 5: Commands supported by Barracuda 36ES2 family drives

Command name	Command code	Supported by SCSI-2/3
Change definition	40h	N
Compare	39h	N
Copy	18h	N
Copy and verify	3Ah	N
Format unit [1]	04h	Y
Block Format		N
Bytes from index		Y
Physical sector format		Y
DPRY bit supported		N
DCRT bit supported		Y
STPF bit supported		Y
IP bit supported		Y
DSP bit supported		Y
IMMED bit supported		Y
VS (vendor specific)		N
Inquiry (see Table 7 for Inquiry data)	12h	Y
Date code page (C1h)		Y
Device Behavior page (C3h)		Y
Firmware numbers page (C0h)		Y
Implemented operating def page (81h)		Y
Jumper settings page (C2h)		Y
Supported Vital product data page (00h)		Y
Unit serial number page (80h)		Y
Lock-unlock cache	36h	N
Log select	4Ch	Y
DU bit		N
DS bit		Y
TSD bit		Y
ETC bit		N
TMC bit		N
LP bit		N
Log sense	4Dh	Y
Cache statistics page (37h)		Y
Non-medium error page (06h)		Y
Pages supported list (00h)		Y
Power-on time page (3Eh)		Y
Read error counter page (03h)		Y
Drive self-test page (10h)		Y
S.M.A.R.T. attribute log page (30h)		Y
Verify error counter page (05h)		Y

Table 5: Commands supported by Barracuda 36ES2 family drives (Continued)

Command name	Command code	Supported by SCSI-2/3
Write error counter page (02h)		Y
Mode select (same pages as Mode Sense 1Ah)	15h	Y [2]
Mode select (10) (same pages as Mode Sense 1Ah)	55h	Y
Capacity Programming		Y
Mode sense	1Ah	Y [2]
Caching parameters page (08h)		Y
Control mode page (0Ah)		Y
Disconnect/reconnect (02h) (DTDC, DIMM not used)		Y
Error recovery page (01h)		Y
Format page (03h)		Y
Information exceptions control page (1Ch)		Y
Notch and Partition Page (0Ch)		N
Power condition page (1Ah)		Y
Rigid disc drive geometry page (04h)		Y
Unit attention page (00h)		Y
Verify error recovery page (07h)		Y
Xor Control page (10h)		N
Mode sense (10) (same pages as Mode Sense 1Ah)	5Ah	Y
Prefetch	34h	N
Read	08h	Y
Read buffer (modes 0, 2, 3, Ah and Bh supported)	3Ch	Y
Read capacity	25h	Y
Read defect data (10)	37h	Y
Read defect data (12)	B7h	Y
Read extended	28h	Y
DPO bit supported		Y
FUA bit supported		Y
Read long	3Eh	Y
Reassign blocks	07h	Y
Rebuild	81h	N
Receive diagnostic results	1Ch	Y
Supported diagnostics pages (00h)		Y
Translate page (40h)		Y
Regenerate	82h	N
Release	17h	Y
Release (10)	57h	Y
Request sense	03h	Y
Actual retry count bytes		Y
Deferred error supported		Y
Extended sense		N
Field pointer bytes		Y
Reserve	16h	Y
3rd party reserve		Y
Extent reservation		N
Reserve (10)	56h	Y
3rd part reserve		Y
Extent reservation		N

Table 5: Commands supported by Barracuda 36ES2 family drives (Continued)

Command name	Command code	Supported by SCSI-2/3
Rezero unit	01h	Y
Search data equal	31h	N
Search data high	30h	N
Search data low	32h	N
Seek	0Bh	Y
Seek extended	2Bh	Y
Send diagnostics	1Dh	Y
Supported diagnostics pages (00h)		Y
Translate page (40h)		Y
DST (logical unit self-test diagnostics)		Y
Set limits	33h	N
Start unit/stop unit (spindle ceases rotating) (1Ch)	1Bh	Y
Synchronize cache	35h	Y
Test unit ready	00h	Y
Verify	2Fh	Y
DPO bit supported		Y
BYTCHK bit		Y
Write	0Ah	Y
Write and verify	2Eh	Y
DPO bit		Y
BYTCHK bit		Y
Write buffer (modes 0, 2, supported)	3Bh	Y
Firmware download option (modes 5, 7, Ah and Bh supported) [3]		Y
Write extended	2Ah	Y
DPO bit		Y
FUA bit		Y
Write long	3Fh	Y
Write same	41h	Y
PBdata		N
LBdata		N
XDRead	52h	N
XDWrite	50h	N
XDWrite extended	80h	N
XPWrite	51h	N

[1] The drive can format to any even number of bytes per sector from 512 to 4,096.
[2] Tables 8 and 9 show how individual bits are set and which are changeable by the host.
[3] **WARNING:** A power loss during flash programming can result in firmware corruption. This usually makes the drive inoperable.

Table 6 lists the Standard Inquiry command data that the drive should return to the initiator per the format given in the *SCSI Interface Product Manual,* part number 75789509, Inquiry command section.

Table 6: Barracuda 36ES2 family drive Standard Inquiry data

Bytes	Data (HEX)																
0-15	00	00	[03][1]	[12][2]	8B	00	[01]	[3E]	53	45	41	47	41	54	45	20	VENDOR ID
16-31	53	54	[33]	[33]	[36]	[39]	[33]	[38]	[4C]	[57][3]	20	20	20	20	20	20	PRODUCT ID
32-47	R#	R#	R#	R#	S#	S#	S#	S#	S#	S#	S#	S#	00	00	00	00	
48-63	00	00	00	00	00	00	00	00	0C	00	00	00	00	00	00	00	
64-79	00	00	00	00	00	00	00	00	00	00	00	00	00	00	00	00	
80-95	00	00	00	00	00	00	00	00	00	00	00	00	00	00	00	00	
96-111	00	43	6F	70	79	72	69	67	68	74	20	28	63	29	20	[32]	COPYRIGHT
112-127	[30]	[30]	[30][5]	20	53	65	61	67	61	74	65	20	41	6C	6C	20	NOTICE
128-143	72	69	67	68	74	73	20	72	65	73	65	72	76	65	64	20	

[ ][1] 03 means SCSI-3 (Ultra160) implemented.

[ ][2] 02 means response data in SCSI-3 (Ultra160) format. In addition, 12 indicates that the drive uses the hierarchical addressing mode to assign LUNs to logical units (default is 12).

R# Four ASCII digits representing the last four digits of the product Firmware Release number. This information is also given in the Vital Product Data page C0h, together with servo RAM and ROM release numbers.

S# Eight ASCII digits representing the eight digits of the product serial number.

[ ][3] Bytes 18 through 25 reflect model of drive. The table above shows hex values for Model ST336938LW. Values for all models are listed below:

ST336918N	33 33 36 39 31 38 4E 20
ST318418N	33 31 38 34 31 38 4E 20
ST318438LW	33 31 38 34 33 38 4C 57

[ ][5] Copyright Year - changes with actual year.

9.3.1 Inquiry Vital Product data

Instead of the standard Inquiry data shown in Table 6, the initiator can request several Vital Product Data pages by setting the Inquiry command EVPD bit to one. The *SCSI Interface Product Manual,* part number 75789509, lists the Vital Product Data pages and describes their formats. A separate Inquiry command must be sent to the drive for each Vital Product Data page the initiator wants the drive to send back.

Table 7 shows the Vital Product Data pages for the drives of this product manual. “Y” means reporting that particular parameter is supported, but it may be different for each drive.

Table 7: Vital product data pages

Byte	Page	Supported
Unit serial number page 80h		
0	Peripheral qualifier/peripheral device type	—
1	Page code number	80
2	Reserved	00
3	Page length	14
4-23	Product serial number	Y
Implemented operating definition page 81h		
0	Peripheral qualifier/peripheral device type	—
1	Page code number	81
2	Reserved	00
3	Page length	03
4	SAVIMP=0, current operating definition	Y
5	SAVIMP=0, default operating definition	Y
6	SAVIMP=0, supported operating definition	Y
Firmware numbers page C0h		
0	Peripheral qualifier/peripheral device type	—
1	Page code number	C0
2	Reserved	00
3	Page length	38
4-11	SCSI firmware release number	Y
12-19	Servo firmware release number	Y
20-27	SAP block point numbers (major/minor)	Y
28-31	Servo firmware release date	Y
32-35	Servo firmware release year	Y
36-43	SAP firmware release number	Y
44-47	SAP firmware release date	Y
48-51	SAP firmware release year	Y
52-55	SAP manufacturing key	Y
56-59	Servo firmware product families and product family member IDs	Y
Data code page C1h		
0	Peripheral qualifier/peripheral device type	Y
1	Page code number	C1
2	Reserved	00
3	Page length	10
4-11	Manufacture (ETF) date—MMDDYYYY	Y
12-19	SCSI firmware release date—MMDDYYYY	Y

Table 7: Vital product data pages (Continued)

Byte	Page	Supported
Jumper settings page C2h		
0	Peripheral qualifier/peripheral device type	Y
1	Page code number	C2
2	Reserved	00
3	Page length	02
4	SCSI ID, delayed motor start, motor start, write protect, parity enable	Y
5	Terminator enable	[1]

[1] “N” models support Terminator Enable.

Vital Product data pages C3h, D1h, and D2h are supported vendor-specific pages. Descriptions of their usage are not available at this time.

9.3.2 Mode Sense data

The Mode Sense command provides a means for the drive to report its operating parameters to the initiator. The drive maintains four sets of Mode parameters, Default values, Saved values, Current values and Changeable values.

Default values are hard coded in the drive firmware that is stored in flash EPROM nonvolatile memory on the drive PCBA. Default values can be changed only by downloading a complete set of new firmware into the flash EPROM. An initiator can request and receive from the drive a list of default values and use those in a Mode Select command to set up new current and saved values, where the values are changeable.

Saved values are stored on the disk media using a Mode Select command. Only parameter values that are allowed to be changed can be changed by this method. See “Changeable values” defined below. Parameters in the saved values list that are not changeable by the Mode Select command get their values from the default values storage.

Current values are volatile values currently being used by the drive to control its operation. A Mode Select command can be used to change these values (only those that are changeable). Originally, they are installed from saved or default values after a power on reset, hard reset, or Bus Device Reset message.

Changeable values form a bit mask, stored in nonvolatile memory, that dictates which of the current values and saved values can be changed by a Mode Select command. A “one” allows a change to a corresponding bit; a “zero” allows no change. For example, in Table 8 refer to Mode page 01, in the row entitled “CHG”. These are hex numbers representing the changeable values for mode page 01. Note that bytes 04, 05, 06, and 07 are not changeable, because those fields are all zeros. If some changeable code had a hex value EF, that equates to the binary pattern 1110 1111. If there is a zero in any bit position in the field, it means that bit is not changeable. Bits 7, 6, 5, 3, 2, 1, and 0 are changeable, because those bits are all ones. Bit 4 is not changeable.

Though the drive always reports non-zero values in bytes 00 and 01, those particular bytes are never changeable.

The Changeable values list can only be changed by downloading new firmware into the flash EPROM.

On standard OEM drives the Saved values are taken from the default values list and stored into the saved values storage location on the media prior to shipping.

When a drive is powered up, it takes saved values from the media and stores them to the current values storage in volatile memory. It is not possible to change the current values (or the saved values) with a Mode Select command before the drive is up to speed and is “ready.” An attempt to do so results in a “Check Condition status being returned.

Note. Because there may be several different versions of drive control firmware in the total population of drives in the field, the Mode Sense values given in the following tables may not exactly match those of some drives.

The following tables list the values of the data bytes returned by the drive in response to the Mode Sense command pages for SCSI-2/SCSI-3 implementation (see the *SCSI Interface Product Manual*, part number 75789509).

Definitions:

DEF = Default value. Standard drives are shipped configured this way.
CHG= Changeable bits; indicates if current and saved values are changeable.

Note. Saved values for OEM drives are normally the same as the default values.

Table 8: Mode sense data, ST336938 and ST336918 values (SCSI-2/3 implementation)

Bytes	**00**	**01**	**02**	**03**	**04**	**05**	**06**	**07**	**08**	**09**	**10**	**11**	**12**	**13**	**14**	**15**	**16**	**17**	**18**	**19**	**20**	**21**	**22**	**23**
Mode Sense Data	00	a2	00	10	00	00	00	08	04	4d	53	b6	00	00	02	00								
Mode Page	<----------Mode Page 10 Byte Header Data and Parameter Data Bytes---------->																							
01 DEF	81	0a	c0	0b	f0	00	00	00	0f	00	ff	ff												
01 CHG	81	0a	ff	ff	00	00	00	00	ff	00	ff	ff												
02 DEF	82	0e	80	80	00	0a	00	00	00	00	00	00	00	00	00	00								
02 CHG	82	0e	ff	ff	00	00	00	00	00	00	00	00	87	00	00	00								
03 DEF	83	16	1b	1e	00	00	00	88	00	00	02	84	02	00	00	01	00	63	00	54	40	00	00	00
03 CHG	83	16	00	00	00	00	00	00	00	00	00	00	00	00	00	00	00	00	00	00	00	00	00	00
04 DEF	84	16	00	dc	0c	02	00	00	00	00	00	00	00	00	00	00	00	00	00	00	1c	20	00	00
04 CHG	84	16	00	00	00	00	00	00	00	00	00	00	00	00	00	00	00	00	00	00	00	00	00	00
07 DEF	87	0a	00	0b	f0	00	00	00	00	00	ff	ff												
07 CHG	87	0a	0f	ff	00	00	00	00	00	00	ff	ff												
08 DEF	88	12	14	00	ff	ff	00	00	ff	ff	ff	ff	00	10	00	00	00	00	00	00				
08 CHG	88	12	b5	00	00	00	ff	ff	ff	ff	00	00	a0[1]	ff	00	00	00	00	00	00				
0A DEF	8a	0a	02	00	00	00	00	00	00	00	05	ef												
0A CHG	8a	0a	03	f1	00	00	00	00	00	00	00	00												
1A DEF	9a	0a	00	03	00	00	00	01	00	00	00	04												
1A CHG	9a	0a	00	03	00	00	00	00	00	00	00	00												
1C DEF	9c	0a	00	00	00	00	00	00	00	00	00	01												
1C CHG	9c	0a	8d	0f	ff	ff	ff	ff	ff	ff	ff	ff												
00 DEF	80	02	80	00	0f	00	00	00																
00 CHG	80	02	f7	40	0f	00	00	00																
Read capacity data																								
	04	4d	53	b5	00	00	02	00																

[1] Though byte 12, bit 7 (A0) is shown as changeable, the FSW function governed by that bit is not implemented by this drive.

Table 9: Mode sense data, ST318438 and ST318418 values (SCSI-2/3 implementation)

Bytes	**00**	**01**	**02**	**03**	**04**	**05**	**06**	**07**	**08**	**09**	**10**	**11**	**12**	**13**	**14**	**15**	**16**	**17**	**18**	**19**	**20**	**21**	**22**	**23**
Mode Sense Data	00	a2	00	10	00	00	00	08	02	51	c8	01	00	00	02	00								
Mode Page	<----------Mode Page 10 Byte Header Data and Parameter Data Bytes---------->																							
01 DEF	81	0a	c0	0b	f0	00	00	00	0f	00	ff	ff												
01 CHG	81	0a	ff	ff	00	00	00	00	ff	00	ff	ff												
02 DEF	82	0e	80	80	00	0a	00	00	00	00	00	00	00	00	00	00								
02 CHG	82	0e	ff	ff	00	00	00	00	00	00	00	00	87	00	00	00								
03 DEF	83	16	1b	1e	00	00	00	88	00	00	02	84	02	00	00	01	00	63	00	54	40	00	00	00
03 CHG	83	16	00	00	00	00	00	00	00	00	00	00	00	00	00	00	00	00	00	00	00	00	00	00
04 DEF	84	16	00	67	42	02	00	00	00	00	00	00	00	00	00	00	00	00	00	00	1c	20	00	00
04 CHG	84	16	00	00	00	00	00	00	00	00	00	00	00	00	00	00	00	00	00	00	00	00	00	00
07 DEF	87	0a	00	0b	f0	00	00	00	00	00	ff	ff												
07 CHG	87	0a	0f	ff	00	00	00	00	00	00	ff	ff												
08 DEF	88	12	14	00	ff	ff	00	00	ff	ff	ff	ff	00	10	00	00	00	00	00	00				
08 CHG	88	12	b5	00	00	00	ff	ff	ff	ff	00	00	a0[1]	ff	00	00	00	00	00	00				
0A DEF	8a	0a	02	00	00	00	00	00	00	00	01	8d												
0A CHG	8a	0a	03	f1	00	00	00	00	00	00	00	00												
1A DEF	9a	0a	00	03	00	00	00	01	00	00	00	04												
1A CHG	9a	0a	00	03	00	00	00	00	00	00	00	00												
1C DEF	9c	0a	00	00	00	00	00	00	00	00	00	01												
1C CHG	9c	0a	8d	0f	ff	ff	ff	ff	ff	ff	ff	ff												
00 DEF	80	02	80	00	0f	00	00	00																
00 CHG	80	02	f7	40	0f	00	00	00																
Read capacity data																								
	02	51	c8	00	00	00	02	00																

[1] Though byte 12, bit 7 (A0) is shown as changeable, the FSW function governed by that bit is not implemented by this drive.

9.4 SCSI bus conditions and miscellaneous features supported

Asynchronous SCSI bus conditions supported by the drive are listed below. These conditions cause the SCSI device to perform certain actions and can alter the SCSI bus phase sequence. Other miscellaneous operating features supported are also listed here. Refer to the *SCSI Interface Product Manual,* part number 75789509, for details.

Table 10: SCSI bus conditions and other miscellaneous features

Condition/features supported:

Supported	Conditions or feature
Y	50 and 68 pin interface connectors
Y	1 Mbyte data buffer
N	Active termination disabled via jumper
Y	Terminator power from drive power connector and to SCSI bus option
Y	Terminator power from drive power connector option
Y	Terminator power from SCSI bus pin 26 option
Y	Terminator power from SCSI I/O cable pin 26
Y	Active termination enabled (N models only)
N	Adaptive caching
Y	Adaptive read look-ahead
Y	Arbitrating system
Y	ASYNC burst rate of 5 Mbytes/sec.—single-ended
Y	Asynchronous data transfer
N	Asynchronous event notification
Y	Attention condition
Y	Audio video recovery scheme
N	Automatic adaptive cache (customer unique option)
Y	Capacity programming
Y	Command overhead less than 500 USEC, typ.
Y	Contingent allegiance condition
Y	Deferred error handling
Y	Delayed motor start
Y	Disconnect/reconnect
Y	Embedded servo
Y	Firmware downloadable via SCSI interface
Y	Flag and link bits in control byte supported
Y	Format progress indication
Y	Full automatic read and write reallocation
Y	Hot plugging, with bus active
Y	Immediate status on Format Unit command
Y	Immediate status on Start/Stop command
Y	Immediate status on Synchronize cache
Y	Linked commands—customer unique options
Y	Low voltage differential SCSI (LVD)
Y	Motor start enable
Y	Multi-initiator
Y	Multi-mode drivers/receivers (single-ended/differential)

Supported	Conditions or feature
Y	Parameter rounding
Y	Power management, SCSI-3
Y	Queue tagging (up to 64 Que tags supported)
Y	Read look ahead crossing cylinder boundaries
N	Relative addressing—customer unique options
Y	Reporting actual retry count in Extended Sense bytes 15, 16 and 17.
Y	Reset condition
Y	RPS (rotational position seek/sort)
Y	S2 bit
SCA-2	SCA connector (optional)
Y	SCSI ID accessibility to front end (J6)
Y	SCSI-3 SPI compliant
Y	Variable Sector size, 512 to 4,096 in 2 byte multiples
Y	Segmented caching
Y	S.M.A.R.T. (Self-Monitoring Analysis and Reporting Technology)
N	Sparing scheme per cylinder
N	Sparing scheme per track
N	Sparing scheme per volume
Y	Sparing scheme per zone
Y	Strict bit support
Y	Sustained transfer rate of 3 Mbytes/sec.—single-ended
N	Sync spindles—rotational position offset
N	Synchronized (locked) spindle operation
Y	Synchronous data transfer
Y	Tagged command queuing 64 deep
Y	Target initiated SDTR
N	TTD/CIOP
Y	Ultra SCSI, 20 Mbytes/sec.
Y	Ultra-2 SCSI, 40 Mbytes/sec.
Y	Ultra160 SCSI, 80 Mbytes/sec. (LVD, single transition only)
Y	Ultra160 SCSI, 160 Mbytes/sec. (LVD, double transition only)
Y	Write protected
N	Zero latency read

Supported	Status supported
Y	Good
Y	Check condition
Y	Condition met/good
Y	Busy
Y	Intermediate/good
Y	Intermediate/condition met/good
Y	Reservation conflict
Y	Queue full
N	Auto contingent allegiance active

9.5 Synchronous data transfer

9.5.1 Synchronous data transfer periods supported

Table 11 and Section 9.5.2 list Synchronous Data transfer periods supported by the drive. The data transfer period to be used by the drive and the initiator is established by an exchange of messages during the Message Phase of operation. See the section on message protocol in the *SCSI Interface Product Manual,* part number 75789509.

Table 11: Synchronous data transfer periods

M (decimal)	Transfer period (nanoseconds)	Transfer rate (megatransfers/second)
9	12.5	80.0 [1]
10	25	40.0 [1]
12	50	20.0
25	100	10.0
50	200	5.0

[1] This transfer rate is only allowed when using the LVD interface.

9.5.2 REQ/ACK offset

The maximum value supported by the Barracuda 36ES2 family drives for REQ/ACK offset is 63 (3Fh).

9.6 Physical interface

This section describes the connectors, cables, signals, terminators and bus timing of the DC and SCSI I/O interface. See Section 9.8 and Section 9.9 for additional terminator information.

Figures 16 and 17 show the locations of the DC power connector, SCSI interface connector, drive select headers, and option select headers.

Details of the physical, electrical and logical characteristics are given in sections following, while the SCSI operational aspects of Seagate drive interfaces are given in the *SCSI Interface Product Manual*, part number 75789509.

9.6.1 DC cable and connector

N and LW model drives receive DC power through a 4 pin connector (see Figures 22 and 23 for pin assignments) mounted at the rear of the main PCBA. Recommended part numbers of the mating connector are listed below, but equivalent parts may be used.

Type of cable	Connector	Contacts (20-14 AWG)
14 AWG	MP 1-480424-0	AMP 60619-4 (Loose Piece)
		AMP 61117-4 (Strip)

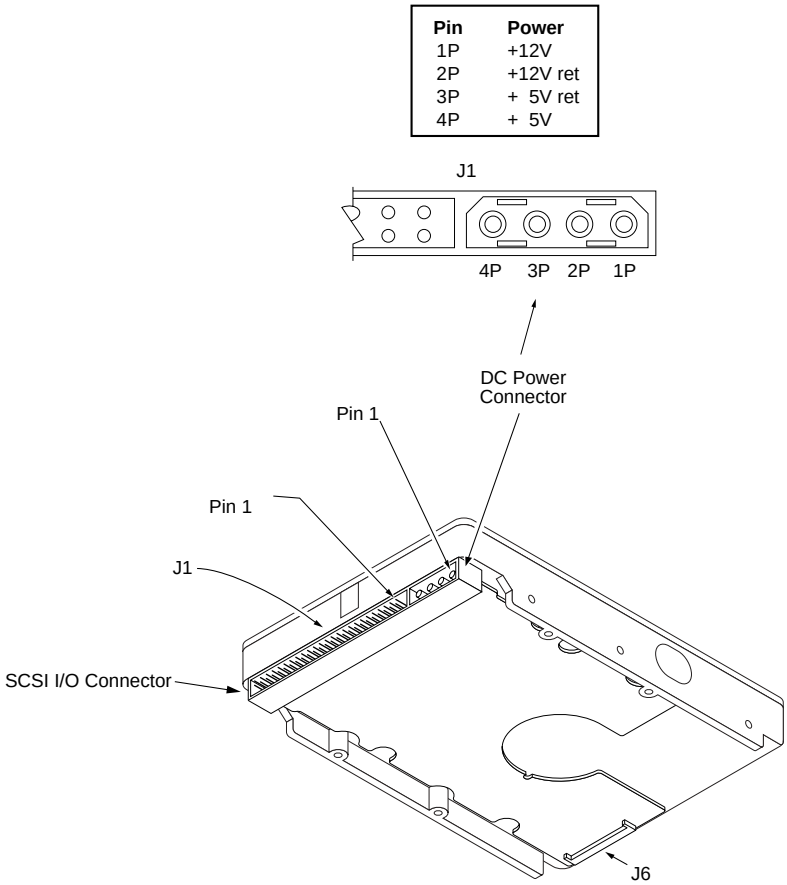

Figure 16. N model drive physical interface (50-pin SCSI I/O connector)

Pin	Power
1P	+12V
2P	+12V ret
3P	+ 5V ret
4P	+ 5V

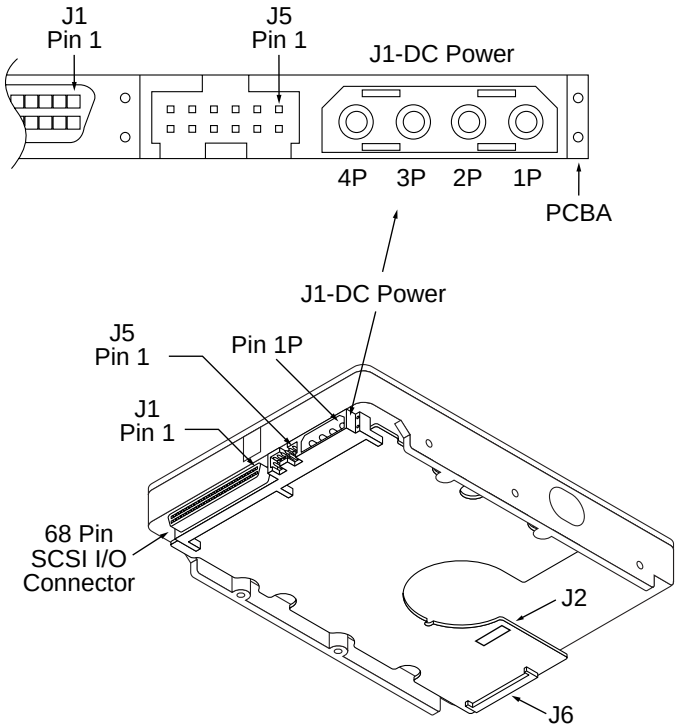

Figure 17. LW model drive physical interface (68-pin J1 SCSI I/O connector)

9.6.2 SCSI interface physical description

The drive models described by this product manual support the physical interface requirements of the Ultra160 SCSI Parallel Interface-3 (SPI-3) standards as defined in American National Standard document X3T10/1302D revision 14, and operate compatibly at the interface with devices that support earlier SCSI-2 and SCSI-3 standards. It should be noted that this is only true if the systems engineering has been correctly done, and if earlier SCSI-2 and SCSI-3 devices respond in an acceptable manner (per applicable SCSI Standards) to reject newer Ultra160 SCSI protocol extensions that they don't support.

The drives documented in this manual support single-ended and low voltage differential physical interconnects (hereafter referred to as SE and LVD, respectively) as described in the ANSI SPI-3 standard. These drives implement driver and receiver circuits that can operate either SE or LVD. However, they cannot switch dynamically between SE and LVD operation.

The drives typically operate on a daisy-chain interface in which other SCSI devices are also operating. Devices on the daisy chain must all operate in the same mode, either SE or LVD, but not a mixture of these. On the interface daisy chain, all signals are common between all devices on the chain, or bus, as it is also called. This daisy chain of SCSI devices must be terminated at both ends with the proper impedance in order to operate correctly. Do not terminate intermediate SCSI devices. In some cases, the SCSI devices at each end have onboard termination circuits that can be enabled by installation of a jumper plug (**TE**) on the device. These termination circuits receive power from either a source internal to the device, or from a line in the interface cable specifically powered for that purpose. LW model drives do not have onboard termination circuits. Some type of external termination circuits must be provided for these drives by the end user or designers of the equipment into which the drives will be integrated. See Standard X3T10/1302D, sections 6.4 and 6.5 for the maximum number of devices that can successfully operate at various interface transfer rates on SE and LVD daisy chains.

Table 12 shows the interface transfer rates supported by the various drive models defined in this manual.

Table 12: Interface transfer rates supported

Interface type/ drive models		Maximum transfer rate					
		Asynchronous	**Fast-5**	**Fast-10**	**Fast-20**	**Fast-40**	**Fast-80**
SE	ST336918N	yes	yes	yes	yes	no	no
LVD	ST336938LW	yes	yes	yes	yes	yes	yes

9.6.3 SCSI interface cable requirements

The characteristics of cables used to connect Ultra160 SCSI parallel interface devices are discussed in detail in Section 6 of ANSI Standard X3T10/1302D. The cable characteristics that must be considered when interconnecting the drives described in this manual in a Ultra160 SCSI parallel, daisy-chain interconnected system are:

- characteristic impedance (see Section 6.1)
- propagation delay (see Section 6.1)
- cumulative length (see sections 6.4 and 6.5)
- stub length (see sections 6.4 and 6.5)
- device spacing (see sections 6.4 and 6.5)

To minimize discontinuances and signal reflections, cables of different impedances should not be used in the same bus. Implementations may require trade-offs in shielding effectiveness, cable length, number of loads and spacing, transfer rates, and cost to achieve satisfactory system operation. If shielded and unshielded cables are mixed within the same SCSI bus, the effect of impedance mismatch must be carefully considered. Proper impedance matching is especially important in order to maintain adequate margin at FAST-20 and FAST-40 SCSI transfer rates.

Note. For LVD operation, twisted pair cables are recommended. For LVD Fast-40 operation, twisted pair cables are *strongly* recommended. For Fast-80 operation, twisted pair cables are *required*.

9.6.4 Mating connectors

Part numbers for the different type connectors that mate with the various Barracuda 36ES2 I/O connectors are given in the sections following.

9.6.4.1 Mating connectors for N model drives

N model drives require a nonshielded cable with a 50-conductor connector consisting of two rows or 25 female contacts with adjacent contacts 100 mils apart.

Recommended mating flat cable connector part numbers are:

Closed end (for cable ends) [1]	3M-3425-7000	W/O strain Relief, No Center Key
	3M-3425-7050	With Strain Relief, No Center Key
	Dupont-66900-290	With Strain Relief, With Center Key
Open end (In daisy-chain) [1]	3M-3425-6000	W/O strain Relief, No Center Key
	3M-3425-6050	With Strain Relief, No Center Key
	Dupont-66900-250	With Strain Relief, With Center Key

The drive device connector is a nonshielded 50-conductor connector consisting of two rows of 25 male pins with adjacent pins 100 mils apart. The connector is keyed (see Figure 18).
Mating panel mount connector: 3M-CHE-2050-J01A10-KLE.

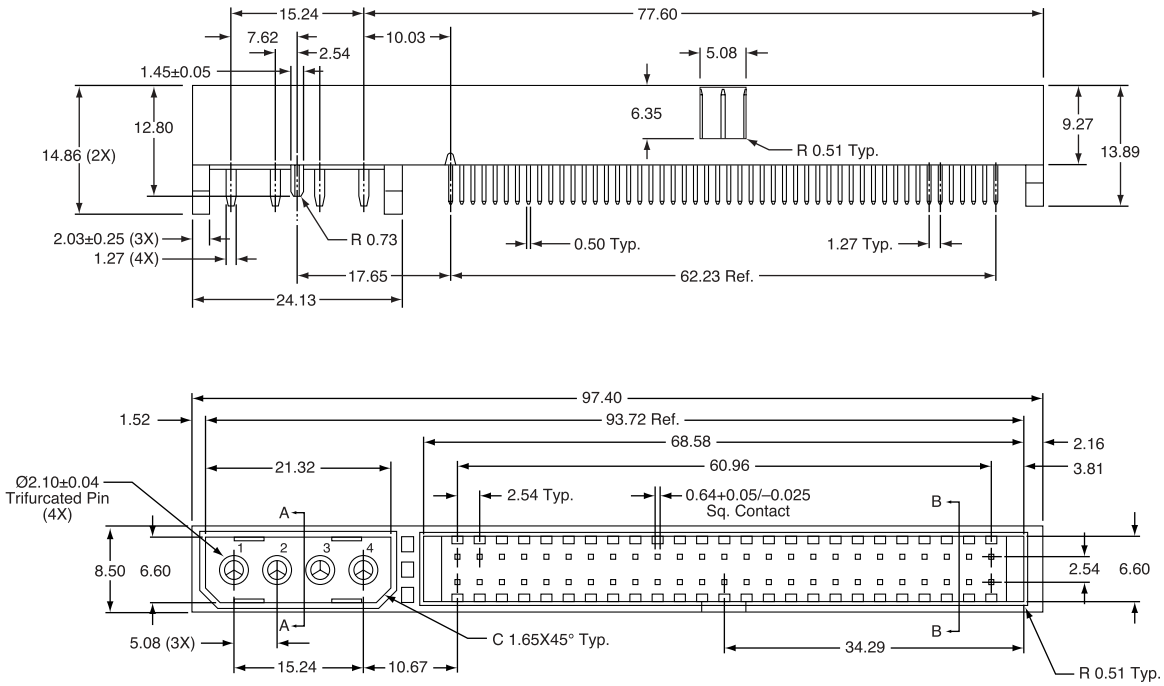

Figure 18. Nonshielded 50-pin SCSI device connector used on N drives

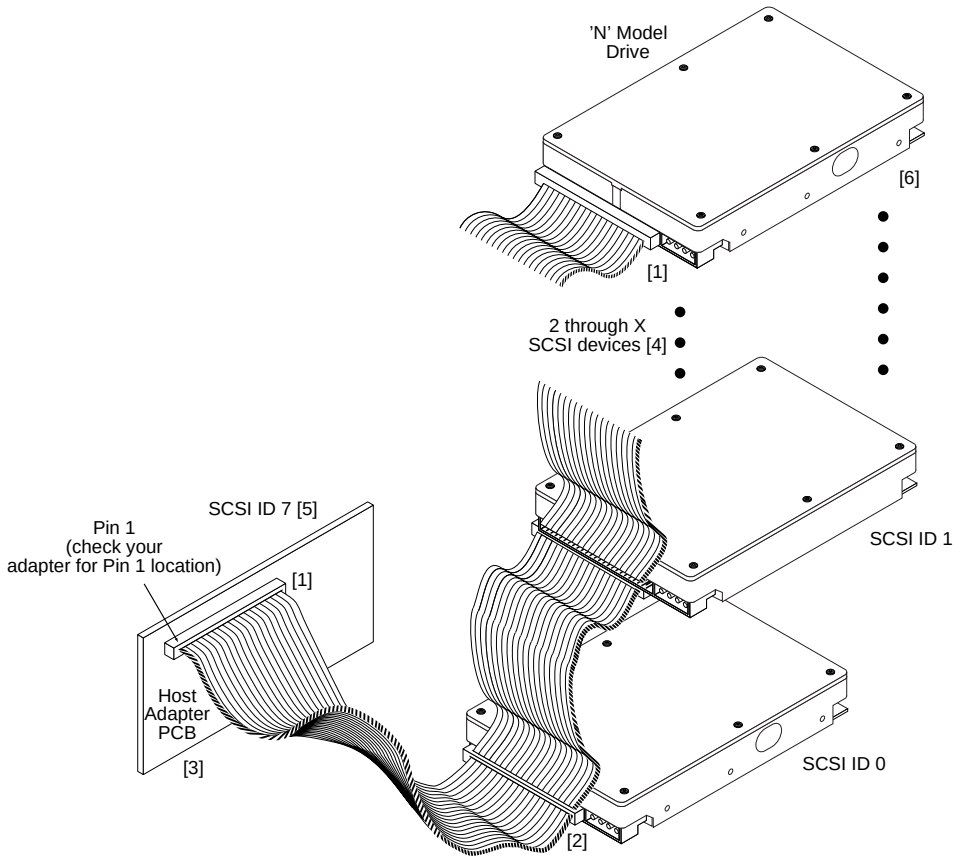

[1] Closed end type 50-pin connector used. Terminators enabled.
[2] Open end type (in-line application) connector used. Terminators disabled.
[3] Host need not be on the end of the daisy-chain. Another device can be on the end with the terminator, the host having no terminator.
[4] Total interface cable length must not exceed that specified in ANSI document X3T10/1302D (including host adapter/initiator). The cable length restriction limits the total number of devices allowed.
[5] SCSI ID7 has highest arbitration priority, ID0 has lowest arbitration priority.
[6] Last drive on the daisy chain.

Figure 19. SCSI daisy chain interface cabling for N drives

9.6.4.2 Mating connectors for LW model drives

The nonshielded cable connector shall be a 68 conductor connector consisting of two rows of 34 male contacts with adjacent contacts 0.050 inch (1.27 mm) apart.

Recommended mating flat cable connector part numbers are:

Amp Model 786096-7	Female, 68-pin, panel mount
Amp Model 786090-7	Female, 68-pin, cable mount
Amp Model 749925-5	(50 mil conductor centers, 28 or 30 AWG wire) Use two, 34 conductor, 50 mil center flat cable with this connector. This type connector can only be used on cable ends. [1]
Amp Model 88-5870-294-5	W/O Strain Relief (25 mil conductor centers, 30 AWG wire). Use either on cable ends or in cable middle section for daisy-chain installations [1].
Amp Model 1-480420-0	Power connector 4 circuit housing
Berg 69307-012	12-position, 2 x 6, 2 mm receptacle housing

[1] See Figure 21.

The drive device connector is a nonshielded 68 conductor connector consisting of two rows of 34 female pins with adjacent pins 50 mils apart. The connector is keyed by means of its shape (see Figure 20).

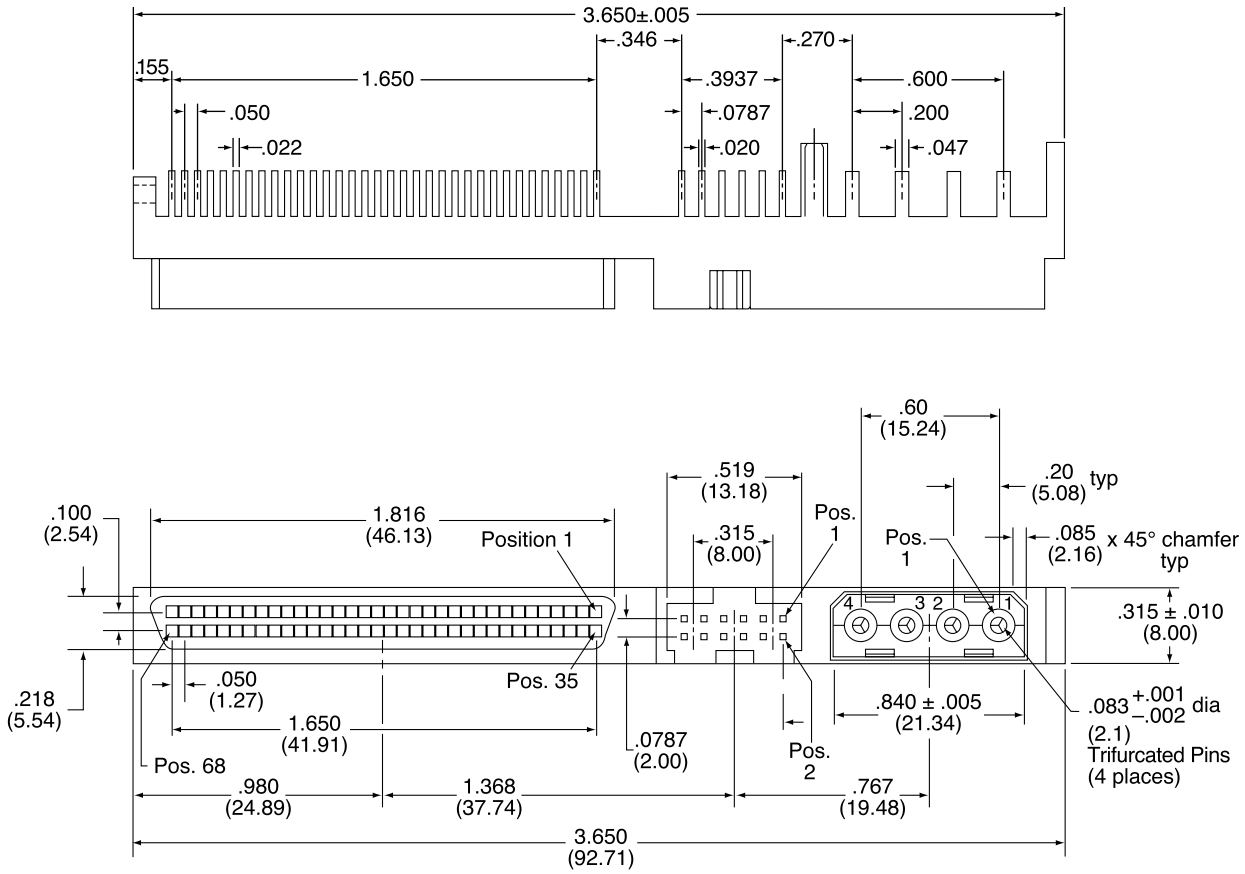

Figure 20. Nonshielded 68 pin SCSI device connector used on LW drives

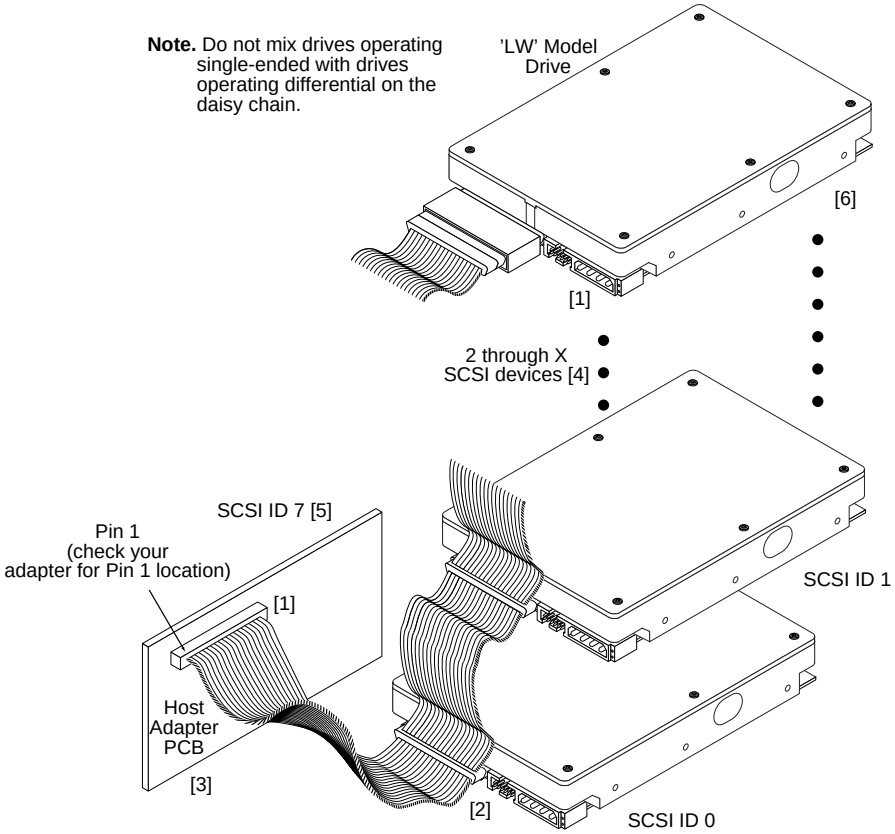

[1] Closed end type 68-pin connector used. Terminators enabled.
[2] Open end type (in-line application) connector used.
[3] Host need not be on the end of the daisy-chain. Another device can be on the end with the terminator, the host having no terminator.
[4] Total interface cable length must not exceed that specified in ANSI document X3T10/1302D (including host adapter/initiator). The cable length restriction limits the total number of devices allowed.
[5] SCSI ID7 has highest arbitration priority, then ID15 to ID8 (ID 8 very lowest).
[6] Last drive on the daisy chain.
[7] Open-end type 68-pin connector used. If end device, use external terminator and closed-end type 68-pin connector.

Figure 21. SCSI daisy chain interface cabling for LW drives

Table 13: "N" model, single-ended I/O, 50 conductor, signal/contact assignments

Signal name [1]	Connector contact number [13]	Cable conductor number [12]		Connector contact number [13]	Signal name [1]
GND	1	1	2	2	–DB0
GND	3	3	4	4	–DB1
GND	5	5	6	6	–DB2
GND	7	7	8	8	–DB3
GND	9	9	10	10	–DB4
GND	11	11	12	12	–DB5
GND	13	13	14	14	–DB6
GND	15	15	16	16	–DB7
GND	17	17	18	18	–DBP
GND	19	19	20	20	GND
GND	21	21	22	22	GND
GND	23	23	24	24	GND
NC [10]	25*	25	26	26	TERMPWR
GND	27	27	28	28	GND
GND	29	29	30	30	GND
GND	31	31	32	32	–ATN
GND	33	33	34	34	GND
GND	35	35	36	36	–BSY
GND	37	37	38	38	–ACK
GND	39	39	40	40	–RST
GND	41	41	42	42	–MSG
GND	43	43	44	44	–SEL
GND	45	45	46	46	–C/D
GND	47	47	48	48	–REQ
GND	49	49	50	50	–I/O

***CAUTION:** Connector contact 25 must not be connected to ground at the host end or the drive end of the cable. If the I/O cable should accidently be plugged in upside down, terminator power on pin 26 will be shorted to ground.

Notes [ ]: See page following Table 15.

Table 14: LW 68-conductor single-ended (SE) P cable signal/pin assignments [11]

Note. A minus sign preceding a signal name indicates that signal is active low.

Signal name [1]	Connector contact number [3]	Cable conductor number [2]		Connector contact number [3]	Signal name [1]
GND	1	1	2	35	–DB12
GND	2	3	4	36	–DB13
GND	3	5	6	37	–DB14
GND	4	7	8	38	–DB15
GND	5	9	10	39	–DBP1
GND	6	11	12	40	–DB0
GND	7	13	14	41	–DB1
GND	8	15	16	42	–DB2
GND	9	17	18	43	–DB3
GND	10	19	20	44	–DB4
GND	11	21	22	45	–DB5
GND	12	23	24	46	–DB6
GND	13	25	26	47	–DB7
GND	14	27	28	48	–DBP
GND	15	29	30	49	GND
GND	16	31	32	50	GND
TermPwr	17	33	34	51	TermPwr
TermPwr	18	35	36	52	TermPwr
Reserved	19	37	38	53	Reserved
GND	20	39	40	54	GND
GND	21	41	42	55	–ATN
GND	22	43	44	56	GND
GND	23	45	46	57	–BSY
GND	24	47	48	58	–ACK
GND	25	49	50	59	–RST
GND	26	51	52	60	–MSG
GND	27	53	54	61	–SEL
GND	28	55	56	62	–C/D
GND	29	57	58	63	–REQ
GND	30	59	60	64	–I/O
GND	31	61	62	65	–DB8
GND	32	63	64	66	–DB9
GND	33	65	66	67	–DB10
GND	34	67	68	68	–DB11

Notes [ ]: See page following Table 15.

Table 15: LW 68-conductor LVD P cable signal/pin assignments [11]

Note. A minus sign preceding a signal name indicates that signal is active low.

Signal name [1]	Connector contact number [3]	Cable conductor number [2]		Connector contact number [3]	Signal name [1]
+DB12	1	1	2	35	–DB12
+DB13	2	3	4	36	–DB13
+DB14	3	5	6	37	–DB14
+DB15	4	7	8	38	–DB15
+DBP1	5	9	10	39	–DBP1
+DB0	6	11	12	40	–DB0
+DB1	7	13	14	41	–DB1
+DB2	8	15	16	42	–DB2
+DB3	9	17	18	43	–DB3
+DB4	10	19	20	44	–DB4
+DB5	11	21	22	45	–DB5
+DB6	12	23	24	46	–DB6
+DB7	13	25	26	47	–DB7
+DBP	14	27	28	48	–DBP
Ground	15	29	30	49	Ground
DIFFSNS [8]	16	31	32	50	Ground
TermPwr	17	33	34	51	TermPwr
TermPwr	18	35	36	52	TermPwr
Reserved	19	37	38	53	Reserved
Ground	20	39	40	54	Ground
+ATN	21	41	42	55	–ATN
Ground	22	43	44	56	Ground
+BSY	23	45	46	57	–BSY
+ACK	24	47	48	58	–ACK
+RST	25	49	50	59	–RST
+MSG	26	51	52	60	–MSG
+SEL	27	53	54	61	–SEL
+C/D	28	55	56	62	–C/D
+REQ	29	57	58	63	–REQ
+I/O	30	59	60	64	–I/O
+DB8	31	61	62	65	–DB8
+DB9	32	63	64	66	–DB9
+DB10	33	65	66	67	–DB10
+DB11	34	67	68	68	–DB11

Notes [ ]: See page following this table.

Notes [ ] for Tables 13 through 15.

[1] See Section 9.6.4.2 for detailed electrical characteristics of these signals.
[2] The conductor number refers to the conductor position when using 0.025-inch (0.635 mm) centerline flat ribbon cable. Other cables types may be used to implement equivalent contact assignments.
[3] Connector contacts are on 0.050 inch (1.27 mm) centers.
[4] Front panel LED signal; indicates drive activity for host front panel hard drive activity indicator.
[5] Asserted by host to enable Motor Start option (enables starting motor via SCSI bus command).
[6] Asserted by host to enable Delayed Motor Start option (motor starts at power on or after a delay of 12 seconds times drive ID). This and [3] above are mutually exclusive options.
[7] Binary code on A3, A2, A1 and A0 asserted by host to set up SCSI bus ID in drive.
[8] GND provides a means for differential devices to detect the presence of a single ended device on the bus. Drive will not operate I/O bus at Ultra2 SCSI data rates if this is grounded.
[9] Signals [4] through [7] are used in place of installing jumpers and cables on option select connectors J2 and J6. See Section 8.1.1 notes.
[10] “NC” means no connection.
[11] 8 bit devices which are connected to the 16 data bit LVD I/O shall leave the following signals open: –DB8, –DB9, –DB10, –DB11, –DB12, –DB13, –DB14, –DB15, and –DBP1.
8 bit devices which are connected to the 16 data bit single-ended (SE) I/O shall have the following signals open: DB8, –DB9, –DB10, –DB11, –DB12, –DB13, –DB14, –DB15, and –DBP1.
All other signals should be connected as shown.
[12] The conductor number refers to the conductor position (right to left in Figure 18) when using 0.050-inch (1.27 mm) centerline flat ribbon cable. Other cable types may be used to implement equivalent contact assignments.
[13] Connector contacts are on 0.100-inch (2.54 mm) centers.

9.7 Electrical description

Barracuda 36ES2 LW model drives are multimode devices. That is, their I/O circuits can operate as either single-ended or low voltage differential drivers/receivers (selectable using the I/O “DIFFSENS” line).

See ANSI Standard X3T10/1302D for details electrical specifications.

9.7.1 Multimode—SE and LVD alternatives

When the interface “DIFFSNS” line is between +0.35 V and +0.5 V, the drive interface circuits operate single-ended and up to and including 20 M transfers/s (Fast-20 or Ultra SCSI). When “DIFFSNS” is between +0.7 V and +1.9 V, the drive interface circuits operate low voltage differential and up to and including 160 M transfers/s or less (Fast-160 or Ultra160 SCSI).

This multimode design does not allow dynamically changing transmission modes. Drives must operate only in the mode for which the installation and interface cabling is designed. Multimode I/O circuits used by these drives do not operate at high voltage differential levels and should never be exposed to high voltage differential environments unless the common mode voltages in the environment are controlled to safe levels for single-ended and low voltage differential devices (see the ANSI SPI-3 specification X3T10/1302D).

Multimode signals

Multimode circuit SE alternative signal characteristics are the same as described elsewhere in Section 9.7.1. The SE alternative for these circuits is selected as described above. SE cables and termination must be used.

LW model drives do not have onboard terminators. The Multimode signal lines (either SE or LVD) should be terminated with 110 ohm active terminator circuits at each end of the total cable. Termination of the I/O lines must be provided for by the Host equipment designers or end users.

The SE and differential alternatives are mutually exclusive.

Output characteristics

Each signal (V_s) driven by LVD interface drivers shall have the following output characteristics when measured at the disc drive connector:

Steady state Low level output voltage* = –.95 V = < V_s = < –1.55 V (signal negation/logic 0)
Steady state High level output voltage* = –.95 V = < V_s = < 1.55 V (signal assertion/logic 1)
Differential voltage = ±0.6 V minimum with common-mode voltage ranges 0.700 V = < V_{cm} = < 1.800 V.

*These voltages shall be measured between the output terminal and the SCSI device's logic ground reference.

The output characteristics shall additionally conform to EIA RS-485.

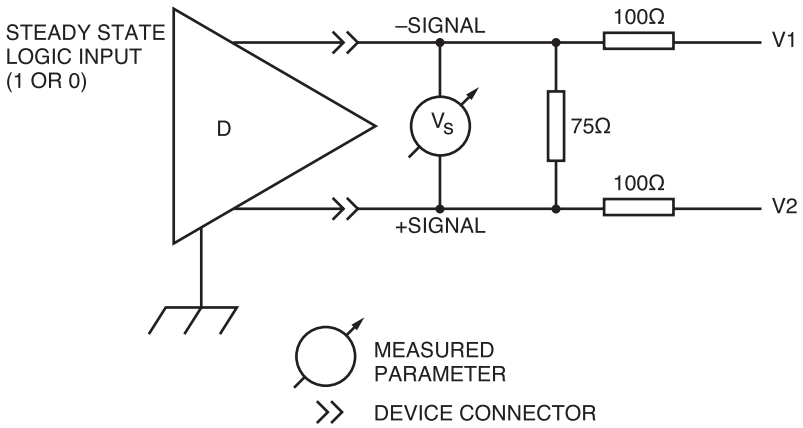

Figure 22. LVD output signals

Input characteristics

Each signal (Vs) received by LVD interface receiver circuits shall have the following input characteristics when measured at the disk drive connector:

Steady state Low level output voltage* = 0.030 V = < V_s = < 3.6 V (signal negation/logic 0)
Steady state High level output voltage* = –3.6 V = < V_s = < –0.030 V (signal assertion/logic 1)
Differential voltage = ±0.30 V minimum with common-mode voltage ranges 0.700 V = < V_{cm} = < 1.800 V. (X3T10/1302D)

*These voltages shall be measured between the output terminal and the SCSI device's logic ground reference.

Input characteristics shall additionally conform to EIA RS-485-983.

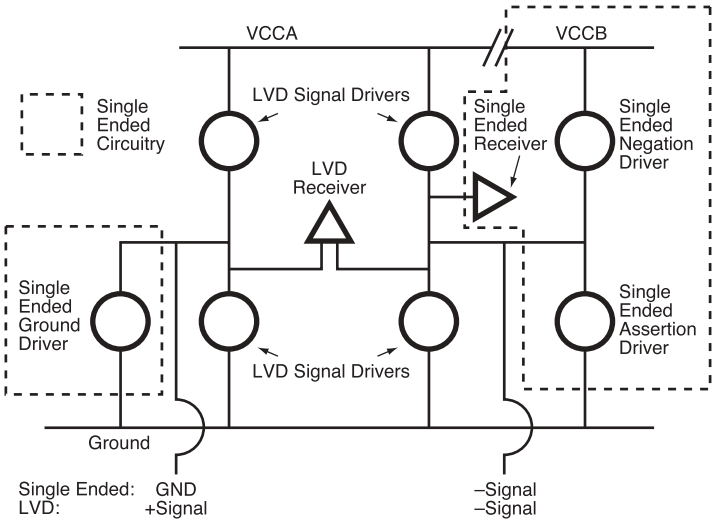

Figure 23. Typical SE-LVD alternative transmitter receiver circuits

9.7.1.1 Single-ended drivers/receivers for N models

For “N” models which use single-ended drivers and receivers, typical circuits are shown in Figure 24. Terminator circuits (see Note [1]) are to be enabled only when the disc drive is first or last in the daisy-chain.

Transmitter characteristics

Single-ended drives use an ANSI SCSI compatible open collector single-ended driver. This driver is capable of sinking a current of 48 mA with a low level output voltage of 0.4 volt.

Receiver characteristics

Single-ended drives use an ANSI SCSI single-ended receiver with hysteresis gate or equivalent as a line receiver.

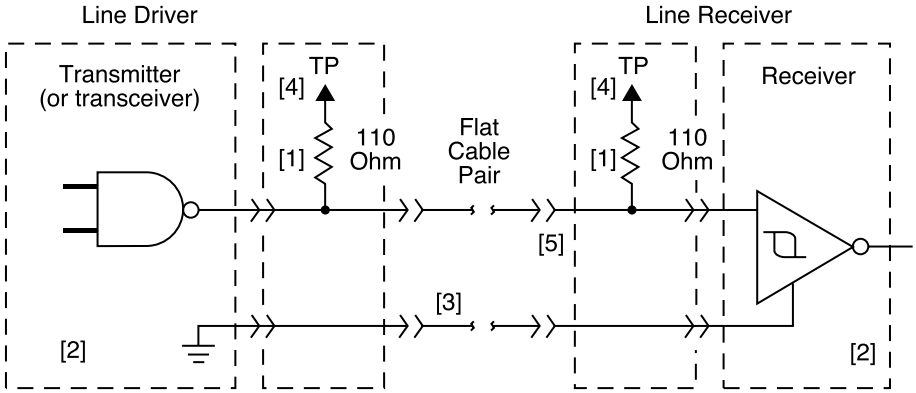

Figure 24. Single-ended transmitters and receivers on N models

Notes.

[1] Part of active terminator circuits. Non-removable LSI terminators, enabled in the drive (model N only) with jumper plug **TE** when it is first of last in the daisy-chain.
[2] ANSI SCSI compatible circuits.
[3] Total interface cable length should not exceed that specified in ANSI Standard T10/1302D.
[4] Source of drive terminator power is an active circuit which has an input source voltage selected by jumper plug **TP**. See Figure 14. Applies to N models.
[5] Interface signal levels and logical sense at the drive I/O connector for N models are defined as follows:
Vil (low-level input voltage) = 1.0 V maximum (signal true); minimum = Vss – 0.5 V.
Vih (high-level input voltage) = 1.9 V minimum (signal false); maximum = Vdd +0.5V.
Vihys (Input Hysteresis) = 425 mV minimum

See ANSI Standard T10/1302D (SPI-3) for detailed electrical specifications.

9.7.1.2 Single-ended drivers/receivers for LW models

The maximum total cable length allowed with drives using single-ended I/O driver and receiver circuits depends on several factors. Table 16 lists the maximum lengths allowed for different configurations of drive usage. These values are from the SPI-3 document. All device I/O lines must have equal to or less than 25 pf capacitance to ground, measured at the beginning of the stub.

Table 16: Cable characteristics for single-ended circuits

I/O transfer rate	Maximum number of devices on the bus	Maximum cable length allowed	Transmission line impedance	
			REQ/ACK	Other signals
≤10M transfers/s	16 (wide SCSI bus)	6 meters (19.7 ft)	90 ± 6 Ohms	90 ± 10 Ohms
≤20M transfers/s	4 (wide SCSI bus)	3 meters (9.8 ft)	90 ± 6 Ohms	90 ± 10 Ohms
≤20M transfers/s	8 (wide SCSI bus)	1.5 meters (4.9 ft)	90 ± 6 Ohms	90 ± 10 Ohms

A stub length of no more than 0.1 meter (0.33 ft) is allowed off the mainline interconnection with any connected equipment. The stub length is measured from the transceiver to the connection to the mainline SCSI bus.

Single-ended I/O cable pin assignments for LW drives are shown in Table 15.

9.7.1.3 Low voltage differential I/O circuits

The maximum total cable length for use with drives using LVD I/O drivers and receiver circuits is 12 meters (39.37 ft.). A stub length of no more than 0.1 meter is allowed off the mainline interconnection with any connected equipment. LVD I/O pin assignments for LW model drives are shown in tables 14 and 15.

9.7.1.4 General cable characteristics

A characteristic impedance of 100 ohm + 10% is recommended for unshielded flat or twisted pair ribbon cable. However, most available cables have a somewhat lower characteristic impedance. To Minimize discontinuities and signal reflections, cables of different impedances should not be used in the same bus. Implementations may require trade-offs in shielding effectiveness, cable length, the number of loads, transfer rates, and cost to achieve satisfactory system operation. If shielded and unshielded cables are mixed within the same SCSI bus, the effect of impedance mismatch must be carefully considered. Proper impedance matching is especially important in order to maintain adequate margin at fast SCSI transfer rates.

9.8 Terminator requirements

N models have active, permanently mounted LSI terminator circuits on board the PCB.

All single initiator/single target (non-daisy-chain) applications require that the Initiator and disc drive be terminated. Daisy-chain applications require that only the units at each end of the daisy-chain be terminated. All other peripherals on the chain must not be terminated (see Figure 21).

Note. Remove drive terminator enabling jumper **TE** where terminators are not required. Removal of terminator power source selection jumper **TP** (see Figure 14) does not disconnect the terminator resistors from the circuit.

It is required that ANSI SCSI-2 Standard's Alternative 2 termination (active termination) be used for applications with single-ended mode, especially if the bus will be operated at transfer rates above 5 Mbytes/sec.

Note. Active terminators are required for use in the daisy chain as described above. Do not use passive terminators at any transfer speed. Do not mix active and passive terminators on the same SCSI bus.

Caution: LW models do not have onboard internal terminators. The user, systems integrator or host equipment manufacturer must provide a terminator arrangement external to the drive when termination is required. For LW drives, terminator modules can be purchased that plug between the SCSI I/O cable and the drive I/O connector or on the end of a short I/O cable stub extending past the last cable connector.

ANSI Standard X3T10/1143D contains additional details about SCSI bus terminator and terminator power requirements.

9.9 Terminator power

N drives

You can configure terminator power in four different ways. See Section 8.1 for illustrations that show how to place jumpers enabling each of the following terminator power configurations:

1. Drive accepts terminator power through SCSI bus pin 26 on N models.
2. Drive supplies power to the SCSI bus.
3. Drive provides terminator power for optional internal terminator resistors using the drive's power connector.
4. Drive provides power to its own terminators and to the SCSI bus terminator power line.

SCSI devices providing terminator power (TERMPWR) must have the following characteristics:

8-bit SCSI:

V TERM = 4.25 V to 5.25 V
800 mA minimum source drive capability
1.0 A maximum

16-bit SCSI:

V TERM = 4.25 V to 5.25 V
1,500 mA minimum source drive capability
3.0 A maximum

LW drives

You can configure terminator power from the drive to the SCSI bus or have the host adaptor or other device supply terminator power to the external terminator. See Section 8.1 for illustrations that show how to place jumpers for this configuration.

9.10 Disc drive SCSI timing

Table 17: Disc drive SCSI timing

Description	Waveform symbol [1]	Waveform table [1]	Typical timing
Target Select Time (no Arbitration)	T00	N/A	<1 µs
Target Select Time (with Arbitration)	T01	4.5-1,2	1.93 µs
Target Select to Command	T02	4.5-1	3.77 µs
Target Select to MSG Out	T03	4.5-2	1.57 µs
Identify MSG to Command	T04	4.5-3	3.36 µs
Command to Status	T05	4.5-5	Command Dependent
Command to Data (para. In)	T06	4.5-9	Command Dependent
Command to Data (para. Out)	T07	4.5-10	Command Dependent
Command to Data (Write to Data Buffer)	T08	4.5-10	Command Dependent
Command to Disconnect MSG	T09	4.5-6	Command Dependent
Disconnect MSG to Bus Free	T10	4.5-6,14	0.52 µs
Disconnect to Arbitration (for Reselect) This measures disconnected CMD overhead	T11	4.5-6	Command Dependent
Target win Arbitration (for Reselect)	T12	4.5-7	3.00 µs
Arbitration to Reselect	T13	4.5-7	1.60 µs
Reselect to Identify MSG In	T14	4.5-7	1.39 µs
Reselect Identify MSG to Status	T15	4.5-8	Command Dependent
Reselect Identify MSG to Data (media)	T16	4.5-11	Command Dependent
Data to Status	T17	4.5-15	Command Dependent
Status to Command Complete MSG	T18	4.5-5,8,15	0.98 µs
Command Complete MSG to Bus Free	T19	4.5-5,8,15	0.51 µs
Data to Save Data Pointer MSG	T20	4.5-14	4.00 µs
Save Data Pointer MSG to Disconnect MSG	T21	4.5-14	0.79 µs
Command Byte Transfer	T22	4.5-4	0.04 µs
Next Command Byte Access:		4.5-4	
Next CDB Byte Access (Byte 2 of 6)	T23.6.2	4.5-4	0.58 µs
Next CDB Byte Access (Byte 3 of 6)	T23.6.3	4.5-4	0.12 µs
Next CDB Byte Access (Byte 4 of 6)	T23.6.4	4.5-4	0.12 µs
Next CDB Byte Access (Byte 5 of 6)	T23.6.5	4.5-4	0.12 µs
Next CDB Byte Access (Byte 6 of 6)	T23.6.6	4.5-4	0.12 µs
Next CDB Byte Access (Byte 2 of 10)	T23.10.2	4.5-4	0.59 µs
Next CDB Byte Access (Byte 3 of 10)	T23.10.3	4.5-4	0.11 µs ±1 µs
Next CDB Byte Access (Byte 4 of 10)	T23.10.4	4.5-4	0.12 µs ±1 µs
Next CDB Byte Access (Byte 5 of 10)	T23.10.5	4.5-4	0.11 µs ±1 µs
Next CDB Byte Access (Byte 6 of 10)	T23.10.6	4.5-4	0.11 µs ±1 µs
Next CDB Byte Access (Byte 7 of 10)	T23.10.7	4.5-4	0.13 µs ±1 µs
Next CDB Byte Access (Byte 8 of 10)	T23.10.8	4.5-4	0.12 µs ±1 µs
Next CDB Byte Access (Byte 9 of 10)	T23.10.9	4.5-4	0.12 µs ±1 µs
Next CDB Byte Access (Byte 10 of 10)	T23.10.10	4.5-4	0.12 µs ±1 µs

Table 17: Disc drive SCSI timing (Continued)

Description	Waveform symbol [1]	Waveform table [1]	Typical timing
Data In Byte Transfer (parameter)	T24	4.5-12	0.04 µs
Data Out Byte Transfer (parameter)	T25	4.5-13	0.04 µs
Next Data In Byte Access (parameter)	T26	4.5-12	0.12 µs
Next Data Out Byte Access (parameter)	T27	4.5-13	0.12 µs
Data In Byte Transfer (media) [2]	T28	4.5-12	0.04 µs
Data Out Byte Transfer (media) [2]	T29	4.5-13	0.04 µs
Next Data In Byte access (media [2]	T30	4.5-12	0.12 µs
Next Data Out Byte access (media [2]	T31	4.5-13	0.12 µs
MSG IN Byte Transfer	T32	4.5-5,7,8,14,15	0.04 µs
MSG OUT Byte Transfer	T33	4.5-2	0.04 µs
STATUS Byte Transfer	T34	4.5-5,8,15	0.04 µs
Synchronous Data Transfer Characteristics:			
Request Signal Transfer Period [3]	–	–	various (800 ns max)

Notes.

[1] See the *SCSI Interface Product Manual,* part number 75789509, timing examples section.
[2] Maximum SCSI asynchronous interface transfer rate is given in Section 4.2.3 of this manual.
[3] Synchronous Transfer Period is determined by negotiations between an Initiator and a Drive. The Drive is capable of setting periods as given in Section 9.5. See also the Synchronous data transfer section and the Extended messages section of the *SCSI Interface Product Manual,* for a description of synchronous data transfer operation.

9.11 Drive activity LED

The following table provides drive activity LED status.

Table 18: Drive activity LED status

Spindle status	Command status	LED status
Spinning up with DC power applied	N/A	On until spinup is complete
Spun down	Start Unit	On while processing the command
Powered down by removal of DC power	N/A	Off due to absence of power
Spun up	Stop Unit	On while processing the command
Spun down	No command activity	Off
Spun down	Write/Read Buffer	On while processing the command
Spun down	SCSI Bus Reset	On while processing the reset
Spun down	Test Unit Ready	On while processing the command
Spun up	No command activity	Off
Spun up	Write/Read	On while processing the command
Spun up	SCSI Bus Reset	On while processing the reset
Spun up	Test Unit Ready	On while processing the command
Spun up	Format with Immediate option on	On while the command is initially processed
Spun up	Format without Immediate	LED toggles on/off on each cylinder boundary

10.0 Seagate Technology support services

Online Services

Internet

www.seagate.com for information about Seagate products and services. Worldwide support is available 24 hours daily by e-mail for your disc or tape questions.

Presales Support:
Disc: www.seagate.com/support/email/email_presales.html *or* DiscPresales@Seagate.com.
Tape: www.seagate.com/support/email/email_tape_presales.html *or* Tape_Sales_Support@Seagate.com.

Technical Support:
Disc: www.seagate.com/support/email/email_disc_support.html *or* DiscSupport@Seagate.com.
Tape: www.seagate.com/support/email/email_tape_support.html *or* TapeSupport@Seagate.com.

Reseller Marketplace
Reseller Marketplace is the storage industry's first collaborative, e-commerce marketplace offering resellers the fastest, most efficient online purchasing process for Seagate storage solutions. The Reseller Marketplace at marketplace.seagate.com, an exclusive service for US resellers participating in the Seagate Partner Program (SPP), is designed to streamline the purchasing process of Seagate solutions and provide unprecedented value to Seagate's resellers through real-time pricing and availability, fast and easy comparison shopping, and seamless integration with key distributors for a one-stop shopping experience.

For support, questions and comments: reseller.seagate.com/benefits/T1.html or 1-877-271-3285 (toll-free) 9 A.M. to 7 P.M. (eastern time) Monday through Friday.

Tape Purchases
US customers can purchase Seagate data cartridges, tape supplies, accessories, and select Seagate tape drive products 24 hours daily at buytape.seagate.com.

Automated Services

SeaFONE® (1-800-SEAGATE) is Seagate's toll-free number (1-800-732-4283) to access our automated self-help services. Using a touch-tone phone, you can find answers to service phone numbers, commonly asked questions, troubleshooting tips and specifications for disc drives and tape drives 24 hours daily. International callers can reach this service by dialing +1-405-936-1234.

SeaFAX® (1-800-SEAGATE) is Seagate's automated FAX delivery system. Using a touch-tone phone, you can obtain technical support information by return FAX 24 hours daily.

Presales Support

Presales Support

Our Presales Support staff can help you determine which Seagate products are best suited for your specific application or computer system.

Technical Support

If you need help installing your drive, consult your dealer. Dealers are familiar with their unique system configurations and can help you with system conflicts and other technical issues. If you need additional help, you can talk to a Seagate technical support specialist. Before calling, note your system configuration and drive model number (ST####).

SeaTDD™ (+1-405-936-1687) is a telecommunications device for the deaf (TDD). You can send questions or comments 24 hours daily and exchange messages with a technical support specialist from 8:00 A.M. to 11:45 A.M. and 1:00 P.M. to 6:00 P.M. (central time) Monday through Friday.

Customer Service (CSO)

Warranty Service

Seagate offers worldwide customer support for Seagate drives. Seagate direct OEM, Distribution and System Integrator customers should contact their Seagate service center representative for warranty information. Other customers should contact their place of purchase.

Authorized Service Centers

If you live outside the US, you can contact an Authorized Service Center for service.

USA/Canada/Latin America Support Services

Presales Support

Call Center	Toll-free	Direct dial	FAX
Disc:	1-877-271-3285	+405-936-1210	+1-405-936-1683
Tape:	1-800-626-6637	+1-714-641-2500	+1-714-641-2410

Technical Support (SeaFONE)

1-800-SEAGATE or +1-405-936-1234 (for specific product phone number)
FAX: *Disc:* +1-405-936-1685; *Tape and Server Appliance:* +1-405-936-1683

SeaFAX	1-800-SEAGATE
SeaTDD	+1-405-936-1687

Warranty Service

Call Center	Toll-free	Direct dial	FAX / Internet
USA, Mexico and Latin America	1-800-468-3472	+1-405-936-1456	+1-405-936-1462
Canada			
*Memofix**	1-800-636-6349	+1-905-660-4936	+1-905-660-4951 www.memofix.com
*Adtech**	1-800-624-9857	+1-905-812-8099	+1-905-812-7807 www.adtech1.com
Brazil			
*MA Centro de Serviços**	—	+55-21-509-7267	+55-21-507-6672 e-mail: sgt_cso@gbl.com.br

European Support Services

For European customer support, dial the toll-free number for your specific country for presales support, technical support, SeaFAX and warranty service.

If your country is not listed here, dial our European call center at +31-20-316-7222 from 8:30 A.M. to 5:00 P.M. (European central time) Monday through Friday. The European call center is located in Amsterdam, The Netherlands.

Call Center	
Austria	0 800-20 12 90
Belgium	0 800-74 876
Denmark	80 88 12 66
France	0 800-90 90 52
Germany	0 800-182 6831
Ireland	1 800-55 21 22
Italy	800-790695
Netherlands	0 800-732 4283
Norway	800-113 91
Poland	00 800-311 12 38

*Authorized Service Centers

Spain	900-98 31 24
Sweden	0 207 90 073
Switzerland	0 800-83 84 11
Turkey	00 800-31 92 91 40
United Kingdom	0 800-783 5177

FAX Services—All European Countries

Presales/Technical Support/Warranty Service 31-20-653-3513

Africa/Middle East Support Services

For presales, technical support, warranty service and FAX services in Africa and the Middle East, dial our European call center at +31-20-316-7222 from 8:30 A.M. to 5:00 P.M. (European central time) Monday through Friday, or send a FAX to +31-20-653-3513. The European call center is located in Amsterdam, The Netherlands.

Asia/Pacific Support Services

For Asia/Pacific presales and technical support, dial the toll-free number for your specific country. The Asia/Pacific toll-free numbers are available from 6:00 A.M. to 10:45 A.M. and 12:00 P.M. to 6:00 P.M. (Australian eastern time) Monday through Friday. If your country is not listed here, direct dial one of our technical support locations.

Call Center	Toll-free	Direct dial	FAX
Australia	1800-14-7201	—	—
China	—	—	+86-10-6871-4316
Hong Kong	800-90-0474	—	+852-2368 7173
Indonesia	001-803-1-003-2165	—	—
Japan	—	—	+81-3-5462-2979
Malaysia	1-800-80-2335	—	—
New Zealand	0800-443988	—	—
Singapore	800-1101-150	+65-488-7584	+65-488-7528
Taiwan	—	+886-2-2514-2237	+886-2-2715-2923
Thailand	001-800-11-0032165	—	—

Warranty Service

Call Center	Toll-free	Direct dial	FAX
Asia/Pacific	—	+65-485-3595	+65-485-4860
Australia	1800-12-9277	—	—
Japan	—	+81-3-5462-2904	+81-3-5462-2979

Index

Symbols

+5 and +12 volt supplies 21

Numerics

50 pin I/O connector 65
68 conductor connector 63
68 pin connector 62, 64

A

AC power 21
access time 8
accessories 7
acoustics 29
activity indicator 68
activity LED 74
actuator 6, 42
actuator assembly 5
address 10
air circulation 42
air cleanliness 29
air flow 26, 42
    suggested 42
air inlet 42
altitude 27
altitude and atmospheric pressure 26
ambient 26
ambient temperature 26, 42
ANSI SCSI documents 4
arbitration priority 62, 64
asynchronous interface transfer rate 74
audible noise 3
Australia/New Zealand Standard 4
automatic retry 13
automatic shipping lock 5
average idle current 21
average latency 6
average rotational latency 8, 9

B

background processing 6
bits/inch 8
buffer 9, 10, 11
buffer segment 10, 11
buffer-full 10
buffer-full ratio 10
bus device reset message 52
bytes per sector 48
bytes/surface 8
bytes/track 8

C

cabinet cooling 42
cable 57
cable length 70
cache 9, 10, 11
cache buffer 6
cache miss 10
cache mode 9
cache operation 9, 10
cache operation hit 11
cache segment 10
caching write data 10
Canadian Department of Communications 3
capacities 7
capacity, drive, programmable 7
case temperature 26
CE Marking 3
change definition command 46
changeable bit 53
changeable value 52
check condition 52
circuits 69
class B limit 3
command 9, 46
command descriptor block (CDB) 9
command queuing 6
condensation 26, 27
conducted noise immunity 21, 22
connect/disconnect 9
connector 57
connector contact 68
consecutive read operation 11
contiguous blocks of data 11
continuous vibration 29
controller 9
controller overhead 8
controller self test 22
cooling 42
C-Tick Marking 3
current 22, 70
current limiting 22
current profile 22, 23
current requirements 21
current value 52, 53
cylinder boundary 11

D

daisy-chain 22, 62, 64, 70, 72
data correction 13
data transfer period 57
data transfer protocol 6
data transfer rate 8, 9
DC cable and connector 57
DC power 9, 13, 41, 57
DC power connector 57
DC power requirements 21
dedicated landing zone 5
default 40, 41
default mode parameter 35

default value 52, 53
defect/error management 33
delayed motor start option 21, 68
delayed start 41
depot repair 14
depot repair philosophy 14
diagnostics 22
differentiating features 5
DIFFSENS 41
dimensions 30
disable read ahead 11
disc access 10
disc drive
    termination 72
disc media 8
disc rotational speed 8
disconnect/reconnect 10
    control 10
    specification 10
discontinuity (DISC) bit 11
DRA bit 11
drive 29
drive activity 68
drive activity LED 74
drive capacity 8
    programmable 7
drive default mode parameter 35
drive failure 14
drive firmware 52
drive ID 35
drive ID select jumper connector 35
drive ID/option select header 35
drive internal 22
drive internal defects and errors 33
drive malfunction 14
drive mounting 30, 43
    constraints 13
drive orientation 42
drive power 35
drive primary defects list 33
drive SCSI timing 73
drive select header 57
drive spindle 41
drive transfer 10
drive volume 35
drive warranty 14
dynamic spindle brake 6

E

ECC 13
ECC correction capability 6
electrical characteristics 57, 68
electromagnetic compatibility 3
electromagnetic interference (EMI) 13
electromagnetic susceptibility 29
embedded servo 6
EMC compliance 3
EMI requirements 3
environment 42
environmental control 29
environmental interference 13
environmental limits 26
environmental requirements 13
EPROM 52
equipment malfunction 13
error 13
error management system 34
error rate 13
error rate calculation 13
error recovery 33
ETF defect list 33
European Union requirements 3
EVPD bit 50
execution time 9
extended messages 46

F

fault status 13
FCC rules and regulations 3
field repair 14
firmware 52
flat ribbon cable 68
flaw reallocation 9
format 48
format command 8
format time 9
formatted 7
formatting 35
front panel 30
front panel LED 68
FSW function 53, 54

G

GMR heads 5
gradient 26, 27
ground 65
ground return 21
grounding 43

H

hard reset 52
hardware error 14
HDA 5, 14, 42, 43
    temperature 26
head and disc assembly. *See* HDA
heat removal 42
heat source 42
high level format 35
host 11, 33, 41, 48, 62, 64, 65
host adapter 35
    adapter/initiator 62, 64
host equipment 43
host system 35

host system malfunction 13
host/drive operational interface 13
hot plug 15
humidity 26, 27

I

I/O cable 65
identified defect 33
idle condition 24
initiator
    termination 72
Input characteristics 69
inquiry command 49
inquiry vital product data 50
installation 35
installation guide 4, 7
installation instructions 35
instantaneous current peak 21
integrated Ultra1/Ultra2 SCSI controller 6
interface cable length 62, 64
interface data 9
interface requirements 45
interface timing 13
interleave 6
internal data rate 8

J

J1-auxiliary 35
jumper 7, 35, 40, 41, 68
jumper function description 41
jumper header 40
jumper plug TE 70
jumper plug TP 70
jumper plug type 35

K

Korean Ministry of Information and Communication 4

L

landing zone 6
LB 10
LED 74
logical 10
logical block 10, 11
logical characteristics 57
logical segment (mode select page 08h) 10
low level format 35
low voltage differential (LVD) drivers and receivers 6
LVD 69
LVD interface receiver circuits 69
LVD output signals 69

M

magnetoresistive heads 5
mating connector 57, 61, 63
mating flat cable connector 63
maximum current requirements 22
maximum operating current 21
maximum starting current 21
ME jumper 41
mean time between failure. *See* MTBF
media 6, 52
media defect 13
media defect induced error 13
medium error 14
message protocol 57
message protocol system 34
messages
    SCSI interface 45
miscellaneous features 55
mode page 01 52
mode page 08h 9
mode parameter 52
    page 08h 11
mode select command 9, 10, 52
mode select page 08h 11
mode sense command 52, 53
mode sense command page 08h 10
mode sense data 52
mode sense value 52
model number table 5
motor start command 9
motor start delay option 68
motor start option 9, 21, 68
mounting configuration 30
mounting configuration dimensions 30
mounting constraints 13, 43
mounting point 43
mounting surface 43
mounting surface distortion 43
mounting surface stiffness 43
MTBF 13, 14, 26
multimode drivers and receivers 6
multiple segment 10
multi-segmented cache control 9

N

noise 22
    audible 3
non-operating 27, 29
    temperature 26
non-operating vibration 29
nonshielded 68 conductor connector 63

O

office environment 29
operating 27, 29
operating environment 14
operating option 35
operating parameter 52
operator intervention 13
option jumper 35

option jumper location 35
option select header 57
option select jumper 35
options 7
orientation 9, 27, 42
out-of-plane deflection 43
out-of-plane distortion 43
Output characteristics 69
output voltage 70

P

package size 27
package test specification 4
packaged 27
parity 41
parity checking 41
parity error 41
partition or logical drive 35
PCB 14, 40, 42
PCBA 35, 43, 52, 57
PD jumper 41
peak bits/inch 8
peak starting current 21
performance characteristics 8
peripheral I/O cable 22
physical buffer space 10
physical characteristics 57
physical damage 29
physical interface 57
physically contiguous blocks of data 11
power 21, 22, 41
power connector 21, 22
power control switch 9
power dissipation 24
power distribution 3
power sequencing 22
power supply voltage 13
power-on 35, 68
power-on operating hours 14
power-on reset 52
power-up 22, 41
power-up hours 14
prefetch 9, 10, 11
prefetch (read look-ahead) 9, 11
prefetch ceiling field 11
prefetch data 11
prefetch field 11
prefetch hit 11
prefetch mode 9
prefetch of contiguous blocks 11
prefetch operation 9, 11
prefetch segmented cache control 9
preventive maintenance 13, 14
printed circuit board. *See* PCB
PRML read channel electronics 5
product data page 50
programmable drive capacity 7

R

radio interference regulations 3
read 10
read command 10, 11
read data 10
read error 13
read error rate 13, 33
read operation 10
read retry count 33
read/write head 8
ready 52
receive diagnostic results 34
receiver circuits 69
recommended mounting 28
recoverable seek error 13
reference documents 4
regulation 21
relative humidity 27
reliability 6
reliability and service 14
reliability specifications 13
remote switch 35
repair facility 14
repair information 19
REQ/ACK offset 57
request sense command 34
request sense information 14
resonance 27
retrieved data 10

S

S.M.A.R.T. 6, 15
safety 3
Safety and Regulatory Agency Specifications 4, 7
saved value 52, 53
SCSI
    commands 46
    format commands 13
    interface data transfer rate 9
    messages 45
SCSI bus cable 35
SCSI bus condition 55
SCSI bus I/O cable 41
SCSI bus ID 68
SCSI bus phase sequence 55
SCSI command 33
SCSI ID 35, 41
SCSI interface 9, 13, 60
SCSI interface cable 60
SCSI interface commands supported 46
SCSI interface connector 57
SCSI interface data 9
SCSI Interface Product Manual 1, 3, 4, 5
SCSI systems error 34
SCSI systems error consideration 33
SCSI systems error management 34

SCSI Ultra160 interface 5
SCSI-2/SCSI-3 53
SE 68
Seagate support service 35
sector 10
sector interleave 8
sector size 7
sector sizes 9
seek error 13
seek positioning error 13
segment 10
segment number 10
self-contained 10
Self-Monitoring Analysis and Reporting Technology. See S.M.A.R.T.
SE-LVD alternative 69
sense key 14
sequential read operations 11
service
  life 13, 14
  philosophy 14
  tools 14
servo data 5
shielding 3
shipping 18
shipping container 26
shock 27
  and vibration 27
shock mount 43
signal ground 43
single unit shipping pack 7
single-ended (SE) drivers and receivers 6
single-ended drive 70
single-ended SCSI driver 70
single-ended SCSI receiver 70
site installation 14
software interleave 11
source voltage 70
spare part 14
spindle 22
spindle startup 41
standard day 26
standards 3
start motor command 21
start unit command 41
start/stop time 9
status 34
stop spindle 9
stop time 9
storage capacity 33
strict bit in Mode page 00h 10
supply voltage 21
support services 75
synchronous data transfer 57
synchronous data transfer operation 74
synchronous data transfer period 57
synchronous transfer period 74
system chassis 43
system recovery procedures 13

T

T10/1302D 70
Taiwanese Bureau of Standards, Metrology, and Inspection 4
technical support services 75
temperature 9, 26, 42
  ambient 26
  case 26
  gradient 26
  non-operating 26
  regulation 3
  See also cooling
termination 22
  active 72
  disc drive 72
  initiator 72
terminator 70
  active 72
terminator circuit 70
terminator enable jumper TE 62, 64, 72
terminator power 41, 65, 70, 72
  source selection jumper TP 72
terminator requirements 35, 72
TP1 position 41
tracks/inch 8
tracks/surface, total 8
transfer period 57
transmitter receiver circuits 69
typical access time 9

U

Ultra160 mode 46
Ultra160 SCSI 5
Ultra160 SCSI controller 6
Ultra160 SCSI interface 6
unformatted 7
unrecoverable condition 13
unrecoverable error 13
unrecoverable seek error 14
Unrecoverable write error 13

V

vibration 27, 29
vital product data 50
volatile memory 52
voltage 9, 21

W

warranty 6, 18
wet bulb temperature 26
wide SCSI Ultra160 interface 5
WP jumper 41
wrap-around 10
write caching 10

write error 13
    unrecoverable 13
write operation 10
write protect 41
write retry count 33

X

X3T10/1143D 72

Z

zoned bit recording (ZBR) 6

Seagate Technology LLC.
920 Disc Drive, Scotts Valley, California 95066-4544, USA
Publication Number: 100182971, Rev. A, Printed in USA