SANnet® II Family Rack Installation Guide for 2U Arrays

September 2005
83-00003879, Revision A

Copyright

Copyright © 2001-2005 Dot Hill Systems Corp. All rights reserved. No part of this publication may be reproduced, stored in a retrieval system, translated, transcribed, or transmitted, in any form or by any means – manual, electric, electronic, electromechanical, chemical, optical, or otherwise – without prior explicit written permission of Dot Hill Systems Corp., 6305 El Camino Real, P.O. Box 9000, Carlsbad, CA., 92009-1606.

Trademarks

Dot Hill Systems, the Dot Hill logo, SANscape, SANnet, and SANpath are registered trademarks of Dot Hill Systems Corp. All other trademarks and registered trademarks are proprietary to their respective owners.

Changes

The material in this document is for information only and is subject to change without notice. While reasonable efforts have been made in the preparation of this document to assure its accuracy, Dot Hill Systems Corp., assumes no liability resulting from errors or omissions in this document, or from the use of the information contained herein. Dot Hill Systems Corp., reserves the right to make changes in the product design without reservation and without notification to its users.

Contents

1. Mounting the Array in Racks and Cabinets 1–1

1.1 Overview of Rackmount Kits 1–1

1.2 Required Site and Chassis Preparation 1–1

1.3 One-Person Installation Requirements 1–2

1.4 Reviewing the Tools 1–2

1.5 Converting Your Front Bezel Locks So the Keys Cannot Be Removed 1–3

2. Cabinet Mounting 2–1

2.1 Reviewing the Components 2–2

2.2 Installing the Array into a Cabinet 2–6

3. Telco Rackmounting 3–1

3.1 Flushmount Configuration 3–1

3.2 Center-of-Gravity Configuration 3–5

4. Powering On and Checking LEDs 4–1

CHAPTER 1

Mounting the Array in Racks and Cabinets

This document describes mounting SANnet II 200 family arrays in supported racks and cabinets.

Topics covered in this chapter include:

- "Overview of Rackmount Kits" on page 1-1
- "Required Site and Chassis Preparation" on page 1-1
- "One-Person Installation Requirements" on page 1-2
- "Reviewing the Tools" on page 1-2
- "Converting Your Front Bezel Locks So the Keys Cannot Be Removed" on page 1-3

1.1 Overview of Rackmount Kits

For late-breaking news about additional supported racks and cabinets, refer to the Release Notes for the model of the array that you are installing. You can find the Release Notes at:

http://www.dothill.com/manuals/

Tip – The instructions in this guide can save you a lot of time if you read them carefully. The entire assembly procedure should take less than 30 minutes if you follow all the instructions provided in this guide.

SANnet II 200 family arrays support:

- Standard 19-inch EIA Rack Cabinets
- Standard 19-inch Telco Racks (flushmount and center of gravity)

1.2 Required Site and Chassis Preparation

Before rackmounting, be sure to check your site location and confirm that you have cables with adequate lengths to connect to servers and to power outlets.

Caution – We recommend that two people install each array**.** One person can install the array if the rail kit contains front and rear brackets with flanges that provide support.

1.3 One-Person Installation Requirements

Two people should install each array; however, one person can install the array:

- In a cabinet if the rail kit contains front and rear brackets with flanges that provide support
- In a Telco rack if the person has an appropriate equipment lift that can ensure safety and ease of installation

For a one-person installation, remove the power supplies and disk drives to reduce weight and to be safe. If possible, position the array on top of another device or shelf in the rack to hold the unit as you attach all the brackets.

Caution – If you have only one person to perform the installation in a cabinet and do not have rear brackets with flanges or special equipment lift, you must remove the power supplies and hard disk drives from the array before installing the array in a rack.

To reduce the weight of the array during the rackmounting procedure, refer to the *SANnet II Family FRU Installation Guide* for your array, and follow instructions on removing drives and power supplies. A fully populated array weighs over 50 pounds; an array without drives and power supplies weighs about 30 pounds.

1.4 Reviewing the Tools

The following tools are used to complete this procedure:

- Medium Phillips screwdriver
- Allen wrench (provided; used with 6-mm screws and #12-24 x 3/8-inch sockethead screws)

Caution – Do not use any power tools with any procedures. Power tools may strip or damage connections.

Note – It is possible for customer-supplied racks to have several different sizes of threaded holes. Rackmount kits have several different sizes of panhead screws and socket-head screws in order to fit these different racks. Sockethead screws are supplied for the front mounting ears when the diameter of the screw is too large for panhead screws to fit.

1.5 Converting Your Front Bezel Locks So the Keys Cannot Be Removed

The bezel on your array has two locks whose keys can be removed when the locks are in either the locked or open position. It is possible to reconfigure the locks so that the keys cannot be removed. It is most convenient to make this optional change when removing the bezel prior to installing the array in a rack or cabinet.

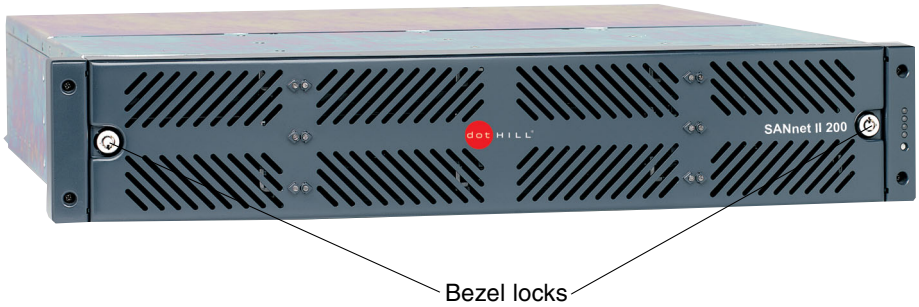

Figure 1-1 Front Bezel and Front Bezel Locks of an Array

To change the locks so the keys cannot be removed, follow these steps:

1. Remove the bezel by gently pivoting the swing arms out of their ear sockets, and make sure the key is in the locked position, with the pawl extending horizontally past the edge of the bezel (see the first panel of Figure 1-2).
2. Hold the key in place and use a 12-mm or 3/8-inch nut driver to remove the locking nut that holds the pawl in place, as shown in the first panel of Figure 1-2.

Caution – Be sure to hold the key in place. Otherwise there is a risk of breaking the small tab on the lock that serves as a stop.

---

3. Lift the pawl off the threaded part of the lock body, as shown in the second panel of Figure 1-2.
4. Set the pawl aside, face up, so that you can remember its orientation when you replace it.
5. Use the key to turn the lock 180 degrees, as shown in the third panel of Figure 1-2.
6. Replace the pawl in the same orientation as before, as shown in the fourth panel of Figure 1-2.
7. Hold the key in place and use the nut driver to refasten the locking nut that holds the pawl in place, as shown in the fifth panel of Figure 1-2. Be careful not to cross-thread the nut.

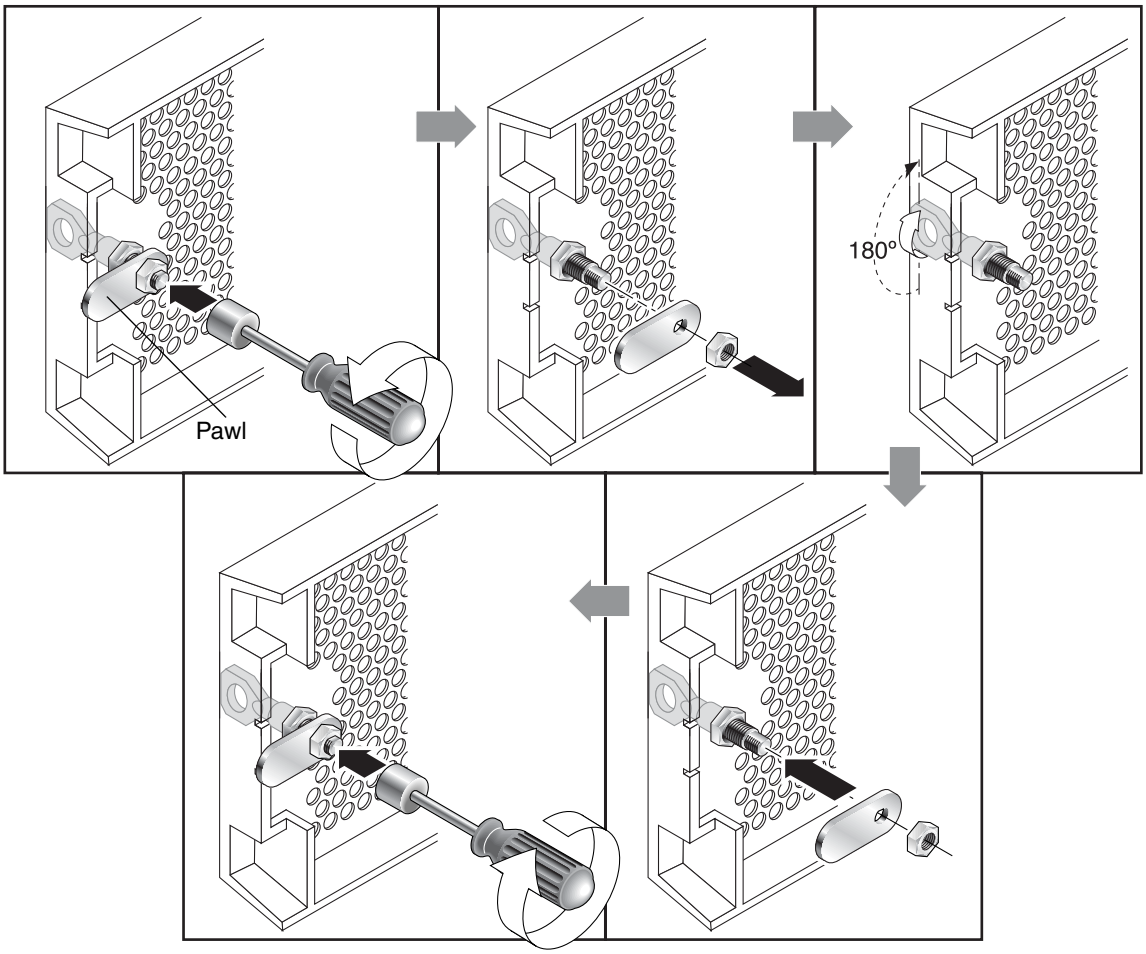

Figure 1-2 Sequence of Steps to Change Front Bezel Locks So Keys Cannot Be Removed

Caution – Be sure to hold the key in place. Otherwise there is a risk of breaking the small tab on the lock that serves as a stop.

8. Replace the bezel.

Note – To convert your bezel locks back so that the keys can be removed, repeat the preceding steps.

CHAPTER 2

Cabinet Mounting

This section explains how to mount SANnet II 200 family arrays using adjustable mounting brackets for depth ranges between 20 to 36 inches (55.88 to 91.44 cm).

The topics covered are:

- "Reviewing the Components" on page 2-2
- "Installing the Array into a Cabinet" on page 2-6

Caution – If you only have one person to perform the installation and do not have rear brackets with flanges, you must remove the power supplies and hard disk drives from the array before installing the array in a rack, and if possible position the array on top of another device or shelf in the rack to hold the unit as you attach all the brackets.

To reduce the weight of the array during the rackmounting procedure, refer to the *SANnet II Family FRU Installation Guide*, and follow instructions on removing drives and power supplies. A fully populated array weighs over 50 pounds; an array without drives and power supplies weighs about 30 pounds.

2.1 Reviewing the Components

The following figure displays a completed installation of an array in a cabinet.

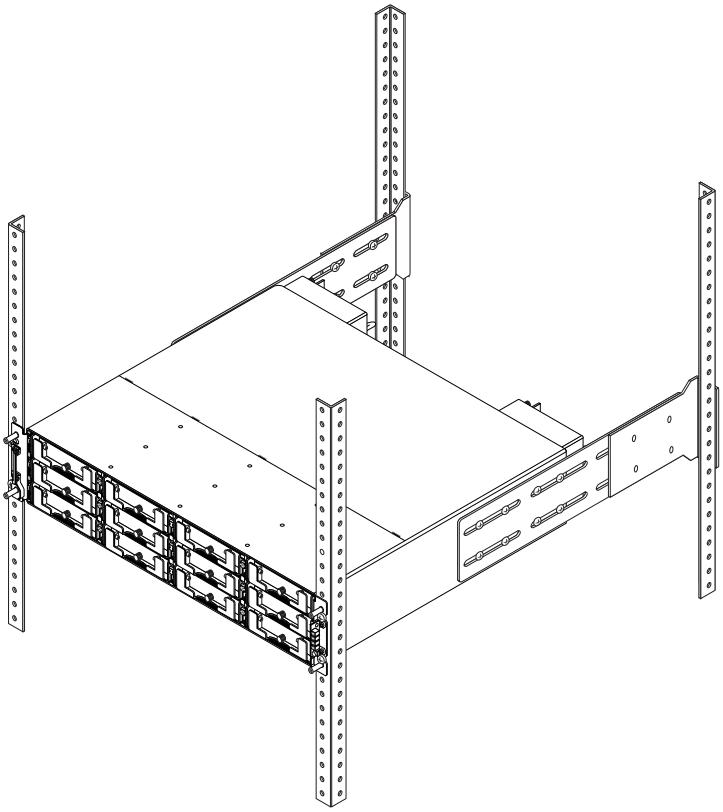

Figure 2-1 Rackmounted Cabinet Array With Chassis Ears and Bezels Removed, After Installation

Before mounting the SANnet II 200 family array into a cabinet, check the following parts lists and refer to Figure 2-2 during installation.

Table 2-1 FHDW010-01 Rack Kit, 2U,19-inch Wide Cabinet, 20-26 Inches Deep

Major Components			Fasteners		
Qty.	Part Number	Description	Qty.	Part Number	Description
2	71-00000653	side brackets	16	01-00000142	#8-32.x 3/16-in. flathead screws
2	71-00000621	rear brackets with flanges [1]	10	01-00000186	#8-32 x 1/4-in. panhead screws
2	79-00000100	front support brackets [2]	16	01-00000192	#10-32 x 3/8-in. panhead screws
			12	02-00000018	#10 flat washers
			5	01-00000151	6-mm socket cap screws
			9	01-00000152	6-mm panhead screws
			16	01-00000150	5-mm panhead screws
			15	01-00000148	#10-32 cage nut, UNF
1	09-00000064	5-mm Allen wrench for 6-mm socket cap screws			

1. The U-shaped flanges support the side brackets and eliminate the need for a second person to support the array while assembling and tightening screws.
2. Temporary support brackets to aide one-person-installs can be removed once front ears are secured.

Table 2-2 FHDW001-01 Rack Kit, 2U,19-inch Wide Cabinet, 22-28 Inches Deep

Major Components			Fasteners		
Qty.	Part Number	Description	Qty.	Part Number	Description
2	71-00000552	side brackets	16	01-00000142	#8-32.x 3/16-in. flathead screws
2	71-00000621	rear brackets with flanges [1]	10	01-00000186	#8-32 x 1/4-in. panhead screws
2	79-00000100	front support brackets [2]	16	01-00000192	#10-32 x 3/8-in. panhead screws
			12	02-00000018	#10 flat washers
			5	01-00000151	6-mm socket cap screws
			9	01-00000152	6-mm panhead screws
			16	01-00000150	5-mm panhead screws
			15	01-00000148	#10-32 cage nut, UNF
1	09-00000064	5-mm Allen wrench for 6-mm socket cap screws			

1. The U-shaped flanges support the side brackets and eliminate the need for a second person to support the array while assembling and tightening screws.
2. Temporary support brackets to aide one-person-installs can be removed once front ears are secured.

Table 2-3 FHDW002-01 Rack Kit, 2U,19-inch Wide Cabinet, 28-36 Inches Deep

Major Components			Fasteners		
Qty.	**Part Number**	**Description**	**Qty.**	**Part Number**	**Description**
2	71-00000553	side brackets	16	01-00000142	#8-32 x 3/16-in. flathead screws
2	71-00000622	rear brackets with flanges [1]	10	01-00000186	#8-32 x 1/4-in. panhead screws
2	79-00000100	front support brackets [2]	16	01-00000192	#10-32 x 3/8-in. panhead screws
			12	02-00000018	#10 washers
			5	01-00000151	6-mm socket cap screws
			9	01-00000152	6-mm panhead screws
			16	01-00000150	5-mm panhead screws
			15	01-00000148	#10-32 cage nut, UNF
1	09-00000064	5-mm Allen wrench for 6-mm socket cap screws			

1. The U-shaped flanges support the side brackets and eliminate the need for a second person to support the array while assembling and tightening screws.

2. Temporary support brackets to aide one-person-installs can be removed once front ears are secured.

Note – It is possible for customer-supplied racks to have several sizes of threaded holes. Rackmount kits have several sizes of panhead screws and sockethead screws in order to fit these various racks. Sockethead screws are supplied for the front mounting ears when the diameter of the screw is too large for panhead screws to fit.

Note – When you finish the installation, you will have unused screws left in your rackmount kit. This does not indicate a problem with your installation. Several types of screws are included for different rack configurations, and extra screws are provided in case any are misplaced.

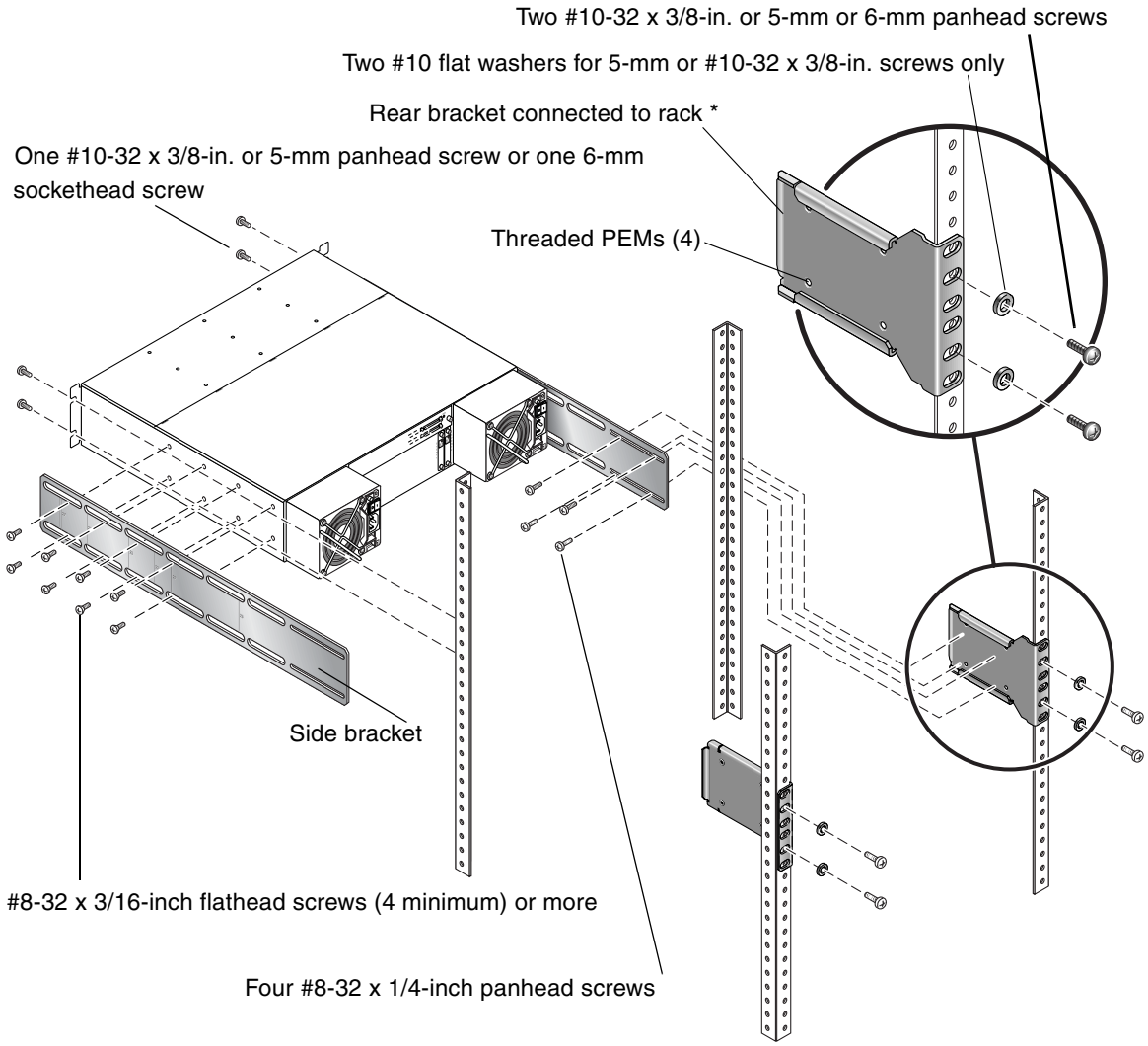

Figure 2-2 Cabinet Rackmount (22- to 28-Inch Deep Rack in a 19-Inch Wide Cabinet)

* Flanged rear brackets support the side brackets and enable a easy one-person installation.

Note – Alternate screws can be used with the appropriate racks: 5-mm panhead screws (front and back), or 6-mm sockethead screws (front) and 6-mm panhead screws (back).

Caution – Do not use any power tools with any procedures. Power tools can strip or damage connections.

2.2 Installing the Array into a Cabinet

Be sure to review "One-Person Installation Requirements" on page 1-2 and "Reviewing the Tools" on page 1-2 before rackmounting the array.

Refer to the parts list in Table 2-2 and Table 2-3 and the illustration in Figure 2-2 during installation. The tables list the major components and fasteners required to install an array into the cabinet.

Note – While the number of screws and bracket types differ based on the depth of the rack and the kit that you purchase, the procedure to install the racks is the same.

---

1. Determine the position at which the array will be installed.

   Install the first array at the *bottom* of the rack, and install each subsequent chassis above the previous one unless otherwise indicated in the RPM manual.

Note – Keep all hardware items in plastic bags until you are ready to use them. This will enable you to correctly identify the screws and avoid confusion.

---

2. Before rackmounting, be sure to check your site location and confirm that you have cables with adequate lengths to connect to servers and to power outlets.
3. **(Square-cut European-style racks only).** Insert the cage nuts in the corresponding holes on the front and rear of the rack.
4. **(Optional).** Before you mount the unit, screw the front support brackets into position on the rack face. The front support brackets enable one person to easily position and support the front of the unit in the rack.

   a. Attach each front bracket to the rack face (See Figure 2-3):

      To connect the front brackets, use a minimum of two screws per front bracket.

      Use the appropriate screws for the rack:

      - #10-32 x 3/8-inch panhead screws
        or
      - 5-mm panhead screws
        or
      - 6-mm panhead screws

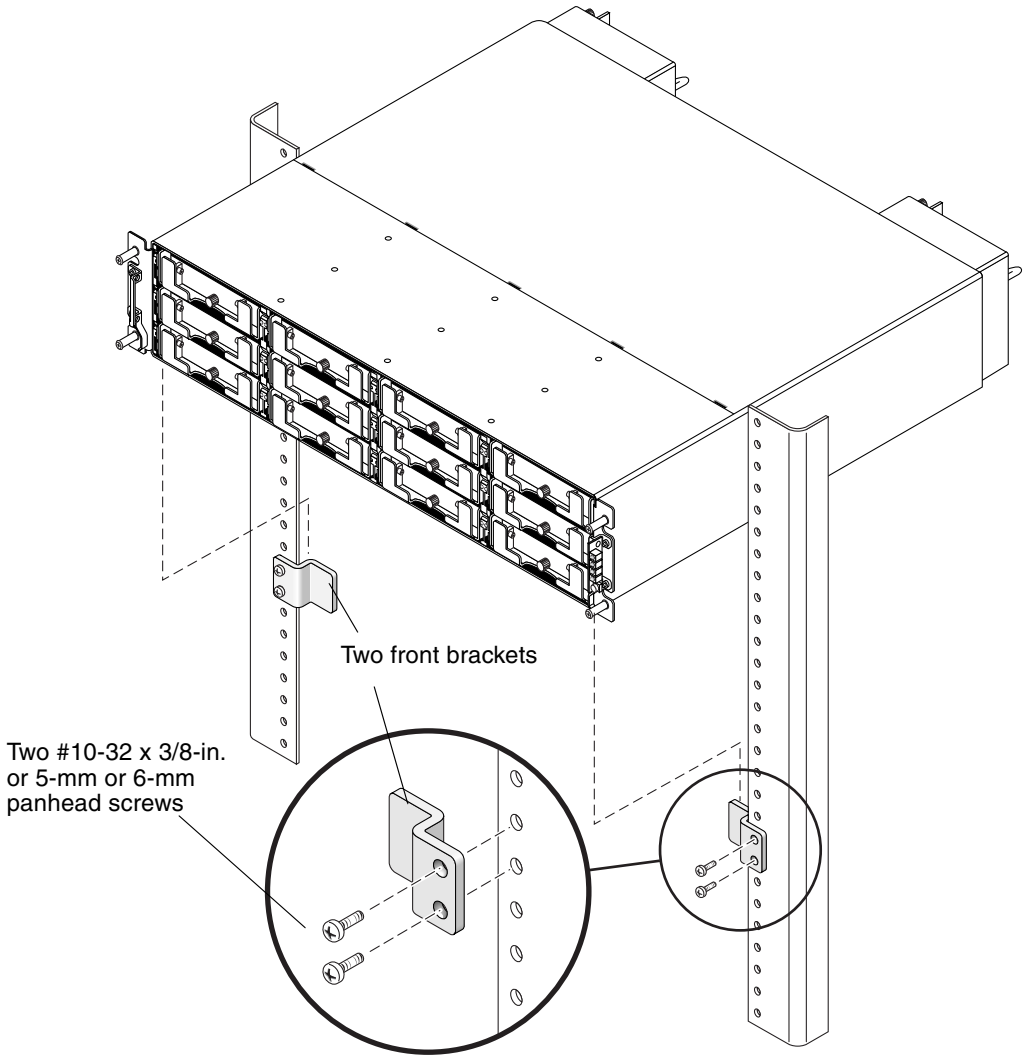

Figure 2-3 Front Bracket Position on the Rack Face

5. Remove the bezel (front faceplate) and the two plastic ear caps from the front of the chassis.

Caution – The plastic ear caps are snap-on parts that require some care when you remove them. Remove the right plastic ear caps carefully to avoid breaking the push button reset switch that is directly below the ear cap.

To remove a plastic ear cap (both caps are removed the same way):

a. Squeeze both sides of the cap at the top and the bottom.

b. Turn the cap toward the center of the array until it disengages and pull it free.

6. Attach the side brackets to the left and right sides of the chassis.

   Attach up to eight #8-32 x 3/16-inch flathead screws on each side to allow some adjustment to the placement. Make sure you use at least four screws on each side. (Torque to 18 inch-pounds.)

   a. Use the alignment marks (depth in inches) stamped into the side brackets to position the brackets and screws.

      Determine the depth you require and align the last (rearmost) alignment mark on the side bracket with the last mounting holes on the chassis.

      Make sure the alignment mark corresponding to the depth you want lines up with the top and bottom threaded holes on the side of the chassis closest to the rear.

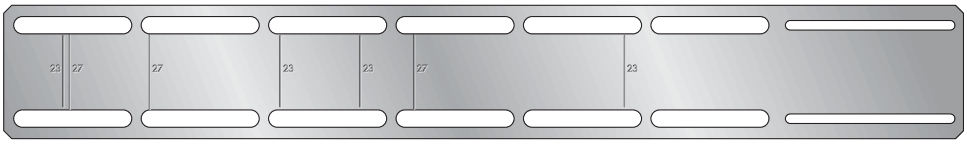

Figure 2-4 Side Bracket With Alignment Marks

   b. Insert the first two screws on each side through the side bracket slots above and below the alignment mark and into the last pair of rear threaded holes in the chassis.

      In Figure 2-5 the 27-inch alignment mark is positioned above and below the last pair of rear threaded holes. This positions the array for a 27-inch deep rack.

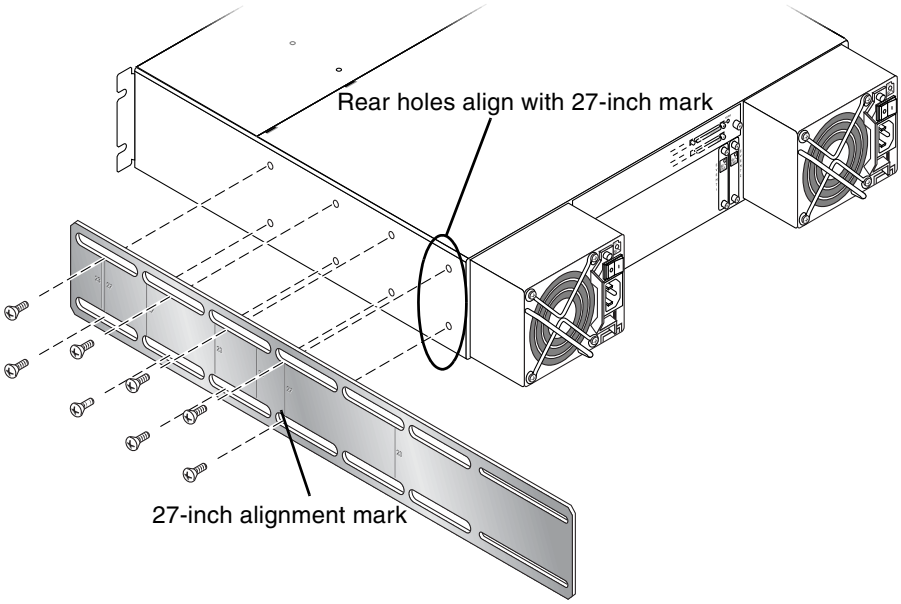

Figure 2-5 Aligning a Side Bracket With the Rear Threaded Holes on the Side of the Array

   c. Insert up to six other screws through the side bracket slots into the other threaded holes in the chassis. (Torque to 18 inch-pounds.)

7. Use a total of four screws and four washers to attach the rear brackets to the rear vertical posts (two screws to attach each bracket to a post).

   a. Attach each rear bracket with two screws.

   Use the appropriate type of screws for the posts:

   - Four #10-32 x 3/8-inch panhead screws with #10 washers
     or
   - Four 5-mm panhead screws with #10 washers
     or
   - Four 6-mm panhead screws (no washers required)

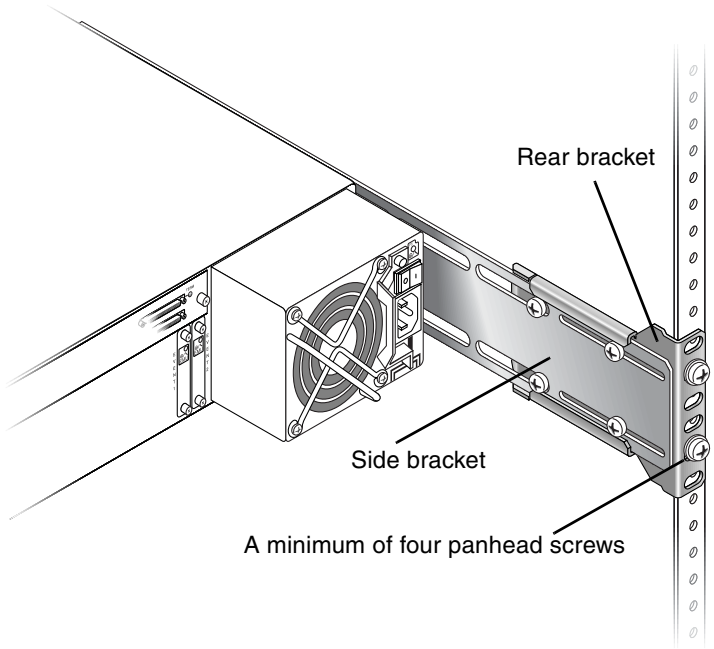

Figure 2-6 Rear and Side Brackets Assembled

8. Lift the chassis and slide the side brackets into the rear brackets, which are attached to the rear posts.

   Adjust the depth of these brackets so that the rear slotted cutouts on the *side brackets* align with the four PEM nuts in the *rear brackets.*

9. Attach each side bracket to a rear bracket (see Figure 2-6):

   To connect the rear brackets and side brackets of a 20- to 36-inch deep rack, use a minimum of four screws each and up to a total of four #8-32 x 1/4-inch panhead screws per bracket. (Torque to 18 inch-pounds.)

10. Attach and secure the array's front mounting ears with four appropriate screws (two screws into each ear):
    - Four #10-32 x 3/8-inch panhead screws
      or
    - Four 5-mm panhead screws
      or
    - Four 6-mm socket cap screws
11. Remount all drives and power/fan modules into the array.
12. If you mounted the unit using the optional front support brackets, remove them from the rack face using a standard screwdriver.
13. Reattach the two plastic ear caps and the bezel onto the front of the chassis.

    Each plastic cap is replaced the same way, but be sure the cap with the LED labels on the right ear.

    a. Align the inside round notches of the cap with the round cylindrical posts (ball studs) on the ear.

    b. Push the top and bottom of the ear cap onto the ear, pressing in on the top side toward the center of the array first.

    c. Continue pushing the top and bottom of the ear cap onto the ear, pressing on the side toward the outside of the array.

       Do not use force when placing a cap on an ear.

Caution – Be careful to avoid "wedging" the reset button below the LEDs on the right ear when you replace the plastic cap over it.

    d. Insert the bezel arms into the chassis holes.

    e. Lift the bezel into position and press it onto the front of the chassis until it is flush with the front.

    f. Use the key to lock both bezel locks.
14. Connect power cables to the chassis, power on, and check for proper operation of the LEDs.

    See "Powering On and Checking LEDs" on page 4-1.

CHAPTER 3

Telco Rackmounting

This section provides the procedure for mounting SANnet II 200 family arrays using Telco hardware.

The topics covered are:

- "Flushmount Configuration" on page 3-1
- "Center-of-Gravity Configuration" on page 3-5

Caution – If you only have one person to perform the installation and do not have rear brackets with flanges, you must remove the power supplies and hard disk drives from the array before installing the array in a rack, and if possible position the array on top of another device or shelf in the rack to hold the unit as you attach all the brackets.

To reduce the weight of the array during the rackmounting procedure, refer to the *SANnet II Family FRU Installation Guide*, and follow instructions on removing drives and power supplies. A fully populated array weighs over 50 pounds; an array without drives and power supplies weighs about 30 pounds.

Caution – Do not use any power tools with any procedures. Power tools can strip or damage connections.

3.1 Flushmount Configuration

Be sure to review "One-Person Installation Requirements" on page 1-2 and "Reviewing the Tools" on page 1-2 before rackmounting the array.

Refer to Figure 3-1 and Table 3-1 during installation.Table 3-1 lists the major components and fasteners required to install an array into the Telco 19-inch wide flushmount racks.

Refer to the following parts list and Figure 3-1 during installation. The following table lists the major components and fasteners required to assemble the Telco 19-inch wide flushmount racks.

Table 3-1 FHDW003-01: Telco Flushmount Rackmount Kit

Major Component			Fasteners		
Qty.	**Part Number**	**Description**	**Qty.**	**Part Number**	**Description**
2	71-00000492	Rear brackets	10	01-00000186	#8-32 x 1/4-in. panhead screws
			10	02-00000019	#8 flat washers
			10	01-00000192	#10-32 x 3/8-in. panhead screws
			4	02-00000018	#10 washers
			5	01-00000151	6-mm socket cap screws
			8	01-00000152	6-mm panhead screws
			10	01-00000150	5-mm panhead screws
			10	01-00000191	#10-24 x 3/8-in. panhead screws
			5	01-00000190	#12-24 x 3/8-in. panhead screws
			5	01-00000193	#12-24 x 3/8-in. socket cap screws
1	09-00000064	5-mm Allen wrench for 6-mm sockethead screws			
1	09-00000063	5/32-inch Allen wrench for #12-24 socket cap screws			

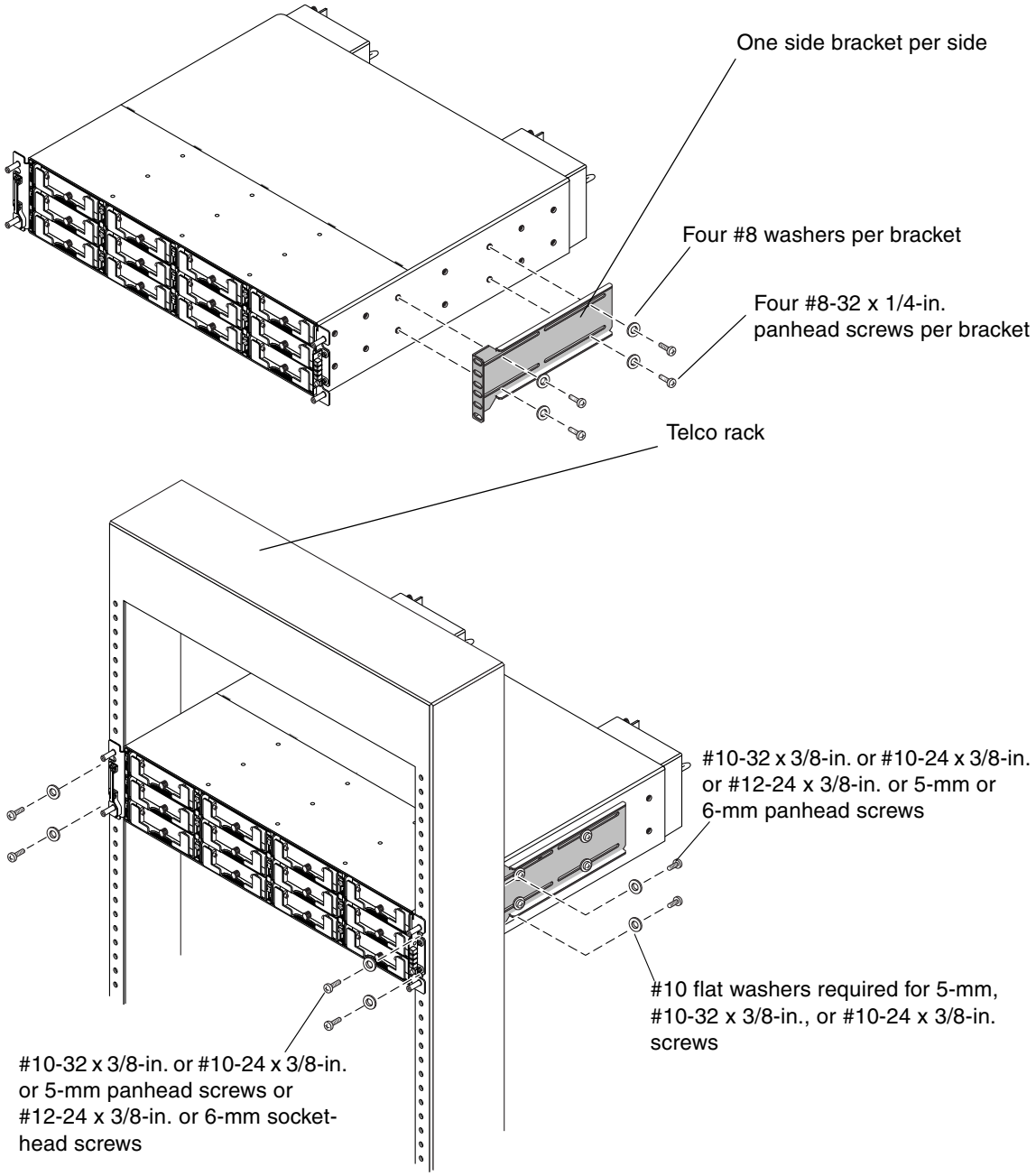

Figure 3-1 Flushmount Assembly

Perform the following installation steps for a Telco flushmount rack configuration (see Figure 3-1).

1. Determine the position at which the array will be installed.

   Install the first array at the *bottom* of the rack, and install each subsequent chassis above the one below.

2. Before rackmounting, be sure to check your site location and confirm that you have cables with adequate lengths to connect to servers and to power outlets.

3. Remove the bezel (front faceplate) and two plastic ear caps from the front of the chassis.

Caution – The plastic ear caps are snap-on parts that require some care when you remove them. Remove the right plastic ear caps carefully to avoid breaking the push button reset switch that is directly below the ear cap.

To remove a plastic ear cap (both caps are removed the same way):

a. Squeeze both sides of the cap at the top and the bottom.

b. Turn the cap toward the center of the array until it disengages and pull it free.

Note – Keep all hardware items in plastic bags until you are ready to use them. This will enable you to correctly identify the screws and avoid confusion.

4. While supporting the chassis, attach the unit to the Telco rack, using four screws through the chassis ears.

   Use the appropriate type of screws for the posts:

   - #10-32 x 3/8-inch panhead screws
     or
   - #10-24 x 3/8-inch panhead screws
     or
   - 5-mm panhead screws
     or
   - 6-mm sockethead screws
     or
   - #12-24 x 3/8-inch sockethead screws

5. Attach the **rear brackets** to the left and right sides of the chassis. Use four #8-32 x 1/4-inch panhead screws with #8 washers per bracket.

6. Attach the chassis to the rear of the Telco rack by inserting four or more screws through the mounting holes located on both sides of the brackets and into the frame.

   Use the appropriate type of screws for the ports:

   - #10-32 x 3/8-inch panhead screws with #10 washers
     or
   - #10-24 x 3/8-inch panhead screws with #10 washers
     or
   - 5-mm panhead screws with #10 washers
     or

- 6-mm panhead screws
  or
- #12-24 x 3/8-inch panhead screws

7. Reinstall all drive modules and power/fan modules into the array if they were removed.

8. Reattach the two plastic ear caps and the bezel onto the front of the chassis.

   Each plastic cap is replaced the same way, but be sure the cap with the LED labels on the right ear.

   a. Align the inside round notches of the cap with the round cylindrical posts (ball studs) on the ear.

   b. Push the top and bottom of the ear cap onto the ear, pressing in on the top side toward the center of the array first.

   c. Continue pushing the top and bottom of the ear cap onto the ear, pressing on the side toward the outside of the array.

      Do not use force when placing a cap on an ear.

Caution – Be careful to avoid "wedging" the reset button below the LEDs on the right ear when you replace the plastic cap over it.

   d. Insert the bezel arms into the chassis holes.

   e. Lift the bezel into position and press it onto the front of the chassis until it is flush with the front.

   f. Use the key to lock both bezel locks.

9. Connect the power cables to the chassis, power on, and check for proper operation of the LEDs.

   For details about the LEDs, see "Powering On and Checking LEDs" on page 4-1.

3.2 Center-of-Gravity Configuration

Be sure to review "One-Person Installation Requirements" on page 1-2 and "Reviewing the Tools" on page 1-2 before rackmounting the array.

Refer to the following parts list and Figure 3-2 during installation. The following table lists the major components and fasteners required to assemble the Telco 19-inch wide center-of-gravity rack.

Table 3-2 FHDW004-01: Telco Center-of-Gravity Rackmount Kit

Major Components			Fasteners		
Qty.	**Part Number**	**Description**	**Qty.**	**Part Number**	**Description**
4	71-00000491	Side brackets	24	01-00000186	#8-32 x 1/4 in. panhead screws
			24	02-00000019	#8 flat washers
			10	01-00000192	#10-32 x 3/8 in. panhead screws
			10	02-00000018	#10 washers
			10	01-00000152	6-mm panhead screws
			10	01-00000150	5-mm panhead screws
			10	01-00000191	#10-24 x 3/8 in. panhead screws
			10	01-00000190	#12-24 x 3/8 in. panhead screws

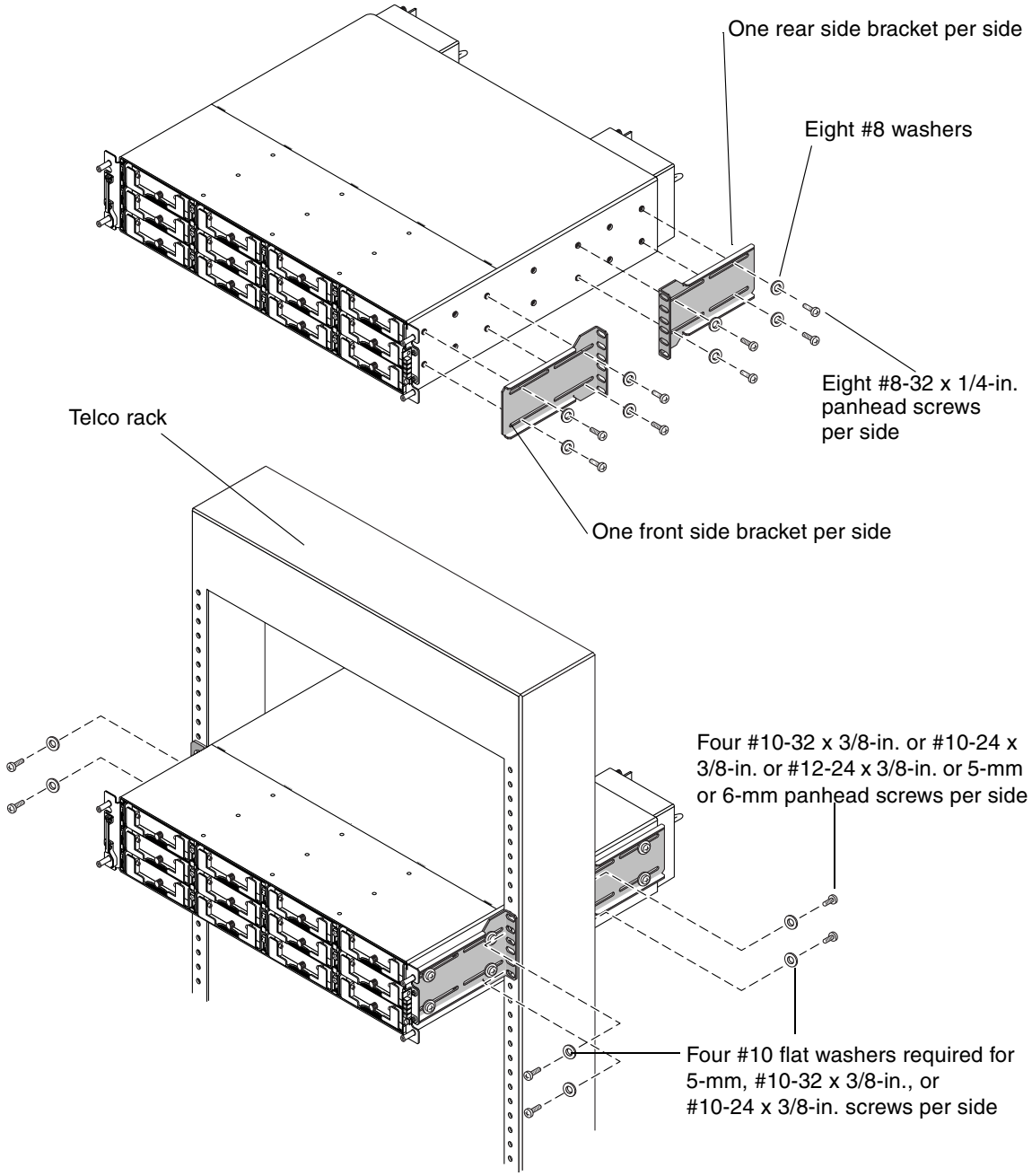

Figure 3-2 Center-of-Gravity Assembly

Perform the following installation steps for a Telco center-of-gravity rack configuration (see Figure 3-2).

1. Determine the position at which the array will be installed.

   Install the first array at the *bottom* of the rack, and install each subsequent chassis above the one below.

2. Before rackmounting, be sure to check your site location and confirm that you have cables with adequate lengths to connect to servers and to power outlets.

Note – Keep all hardware items in plastic bags until you are ready to use them. This will enable you to correctly identify the screw sizes and avoid confusion.

---

3. Remove the bezel (front faceplate) and two plastic ear caps from the front of the chassis.

Caution – The plastic ear caps are snap-on parts that require some care when you remove them. Remove the right plastic ear caps carefully to avoid breaking the push button reset switch that is directly below the ear cap.

To remove a plastic ear cap (both caps are removed the same way):

a. Squeeze both sides of the cap at the top and the bottom.

b. Turn the cap toward the center of the array until it disengages and pull it free.

4. Attach the two **side brackets** to each side of the chassis:

   Allow for the depth of the rack, and allow for the distance you want the chassis to extend forward in the rack. Attach the front brackets first.

   Use up to six #8-32 x 1/4-inch panhead screws with #8 washers for each front side bracket, using the mounting holes available. (Use four screws as a minimum.) Then mount the front brackets to the Telco rack as explained in step 5.

5. Attach the **chassis** to the Telco rack, by inserting four or more screws through the mounting holes located on both sides of the brackets and into the frame.

   a. Use the appropriate type of screws for the ports:

   - #10-32 x 3/8-inch panhead screws with #10 washers
     or
   - #10-24 x 3/8-inch panhead screws with #10 washers
     or
   - 5-mm panhead screws with #10 washers
     or
   - 6-mm panhead screws
     or
   - #12-24 x 3/8-inch panhead screws

   b. Use four #8-32 x 1/4-inch panhead screws with #8 washers for each rear side bracket.

6. Reinstall all drive modules and power/fan modules into the array if they were removed.

7. Reattach the two plastic ear caps and the bezel onto the front of the chassis.

   Each plastic cap is replaced the same way, but be sure the cap with the LED labels on the right ear.

   a. Align the inside round notches of the cap with the round cylindrical posts (ball studs) on the ear.

   b. Push the top and bottom of the ear cap onto the ear, pressing in on the top side toward the center of the array first.

   c. Continue pushing the top and bottom of the ear cap onto the ear, pressing on the side toward the outside of the array.

      Do not use force when placing a cap on an ear.

Caution – Be careful to avoid "wedging" the reset button below the LEDs on the right ear when you replace the plastic cap over it.

   d. Insert the bezel arms into the chassis holes.

   e. Lift the bezel into position and press it onto the front of the chassis until it is flush with the front.

   f. Use the key to lock both bezel locks.

8. Connect power cables to the chassis, power on, and check for proper operation of the LEDs.

   For details about the LEDs, see "Powering On and Checking LEDs" on page 4-1.

CHAPTER 4

Powering On and Checking LEDs

Perform the initial check of the array according to the following procedure.

1. Connect two AC (or DC) power cables to the power/fan modules on the rear of the array.
2. Power on the array using both power switches.
3. Make sure all front LEDs turn solid green.

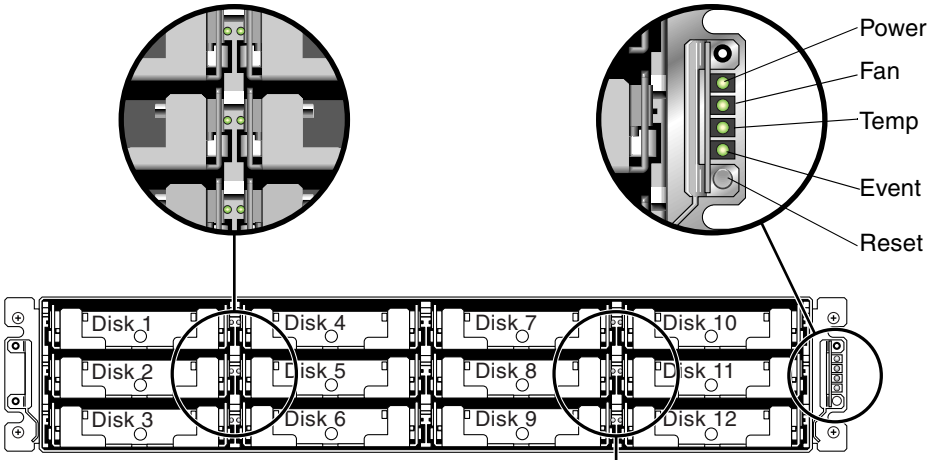

Figure 4-1 Front Panel With LEDs Displayed

Refer to the *Installation, Operation, and Service Manual* for your array for more information about LEDs.