SANnet II U320 SCSI Array Installation, Operation, and Service Manual

January 2006
83-00003498, Revision B

Copyright

Copyright © 2006 Dot Hill Systems Corp. All rights reserved. No part of this publication may be reproduced, stored in a retrieval system, translated, transcribed, or transmitted, in any form or by any means – manual, electric, electronic, electromechanical, chemical, optical, or otherwise – without prior explicit written permission of Dot Hill Systems Corp., 6305 El Camino Real, P.O. Box 9000, Carlsbad, CA., 92009-1606.

Trademarks

Dot Hill Systems, the Dot Hill logo, SANscape, SANnet, and SANpath are registered trademarks of Dot Hill Systems Corp. All other trademarks and registered trademarks are proprietary to their respective owners.

Changes

The material in this document is for information only and is subject to change without notice. While reasonable efforts have been made in the preparation of this document to assure its accuracy, Dot Hill Systems Corp., assumes no liability resulting from errors or omissions in this document, or from the use of the information contained herein. Dot Hill Systems Corp., reserves the right to make changes in the product design without reservation and without notification to its users.

Contents

Preface . . . . . **ix**

1. Product and Architecture Overview **1–1**

1.1 SANnet II U320 SCSI arrays 1–1

1.2 Array Configurations 1–2

1.3 SCSI Architecture 1–3

1.3.1 Redundant Configuration Considerations 1–4

1.4 Device Identification 1–4

1.5 Field-Replaceable Units (FRUs) 1–5

1.5.1 RAID I/O Controller Modules 1–5

1.5.2 I/O Expansion Modules 1–6

1.5.3 Disk Drives 1–6

1.5.4 Battery Module 1–7

1.5.5 Power and Fan Modules 1–7

1.6 Interoperability 1–7

1.7 Additional Software Tools 1–8

2. Site Planning **2–1**

2.1 Customer Obligations 2–1

2.2 Safety Precautions 2–2

2.3 Environmental Requirements 2–3

2.3.1 Electromagnetic Compatibility (EMC) 2–3

2.4 Electrical and Power Specifications 2–3

2.5 Physical Specifications 2–4

2.6 Layout Map 2–4

2.6.1 Rack Placement 2–4
2.6.2 Tabletop Placement 2–5
2.7 Console and Other Requirements 2–6
2.8 Preinstallation Worksheet 2–6

3. Unpacking Your SCSI Array 3–1
3.1 Opening Your Package 3–1
3.2 Checking the SANnet II U320 SCSI Array Package Contents 3–2
3.3 Field-Replaceable Units 3–3
3.4 Customer-Provided Cables 3–3
3.5 Mounting Your Array in a Rack or Cabinet 3–3

4. Connecting Your SCSI Array 4–1
4.1 Converting Your Front Bezel Locks So the Keys Cannot Be Removed 4–2
4.2 Hardware Connections 4–4
4.3 Connecting the Chassis to an AC Power Outlet 4–5
4.4 Connecting the Chassis to DC Power Outlets 4–7
4.5 Powering Up and Checking LEDs 4–8
4.6 Single-Bus and Split-Bus Configurations 4–9
4.6.1 Default Channel Settings 4–10
4.7 Connecting Cables for a Single-Bus Configuration 4–11
4.8 Connecting Cables for a Split-Bus Configuration 4–14
4.8.1 Standard Cabling Scenarios 4–17
4.9 Connecting Ports to Hosts 4–19
4.9.1 Connecting a SANnet II U320 SCSI RAID Array 4–19
4.9.2 Connecting a SANnet II U320 SCSI JBOD Array 4–20
4.10 Cabling to Expansion Units 4–20
4.10.1 Cabling to One Expansion Unit 4–21
4.10.2 Cabling to Two Expansion Units 4–23
4.10.3 Adding an Expansion Unit to an Existing RAID Array 4–25
4.11 Establishing Communications With An Array 4–26
4.11.1 Determining the Default IP Address 4–27
4.11.2 Configuring the RS-232 Serial Port Connection 4–28
4.11.3 Manually Setting a Static IP Address 4–29

4.12 Setting Up Out-of-Band Management Over Ethernet 4–30
4.13 Remaining Steps 4–31
4.14 Power-On Sequence 4–32
4.15 Power-Off Procedure 4–32

5. Checking LEDs 5–1
5.1 LEDs When the Array Is First Powered On 5–1
5.2 Front-Panel LEDs 5–2
5.2.1 Drive LED Status 5–4
5.3 Back-Panel LEDs 5–5
5.3.1 I/O Module LEDs 5–6
5.3.2 RAID Controller LEDs 5–7
5.3.3 Power Supply and Fan Module LEDs 5–7
5.3.4 EMU Module LEDs 5–9

6. Maintaining Your Array 6–1
6.1 Scanning Drives 6–1
6.2 Using Optional Software to Monitor and Manage Your Array 6–2
6.2.1 Out-of-Band Connection 6–2
6.2.2 Inband Connection 6–3
6.3 Battery Operation 6–3
6.3.1 Battery Status 6–3
6.4 Silencing Audible Alarms 6–4
6.5 Viewing Event Logs on the Screen 6–6
6.6 Upgrading Firmware 6–7
6.6.1 Controller Firmware Upgrade Features 6–7
6.6.2 Installing Firmware Upgrades 6–8
6.7 Replacing the Front Bezel and Ear Caps 6–8
6.7.1 Removing the Front Bezel and Ear Caps 6–8
6.7.2 Placing the Bezel and Ear Caps Back Onto the Chassis 6–9

7. Troubleshooting Your Array 7–1
7.1 Sensor Locations 7–1
7.2 RAID LUNs Not Visible to the Host 7–3
7.3 JBOD Disks Not Visible to the Host 7–3

7.4 Controller Failover 7–3
7.5 Recovering From Fatal Drive Failure 7–4
7.6 Using the Reset Button 7–7
7.7 Troubleshooting Flowcharts 7–7
7.7.1 Power Supply and Fan Module 7–8
7.7.2 Drive LEDs 7–10
7.7.3 Front-Panel LEDs 7–14
7.7.4 I/O Controller Module 7–18

A. SCSI Array Specifications A–1
A.1 Physical Specifications A–1
A.2 Summary of SANnet II U320 SCSI Array Specifications A–2
A.3 Agency Approvals and Standards A–3

B. Cabling JBODs B–1
B.1 Known Limitations Affecting SANnet II U320 SCSI JBOD Arrays B–2
B.2 Connecting a SANnet II U320 JBOD Array B–2
B.3 Cabling a Single-Bus JBOD with One Host Connection B–3
B.4 Cabling a Single-Bus JBOD with Two Host Connections B–4
B.5 Cabling a Split-Bus, Single-Initiator JBOD Configuration B–5
B.5.1 Connecting a Split-Bus JBOD to One Host B–6
B.6 Cabling a Split-Bus, Multi-Initiator JBOD Configuration B–7
B.7 Overview of Optional Software Monitoring and Management Tools B–9
B.8 Monitoring with SANscape B–9
B.8.1 Enabling JBOD Support B–9
B.8.2 Viewing Component and Alarm Characteristics B–10
B.9 Event Messages from the SANscape Alert B–12
B.10 Monitoring with the SANscape CLI B–12
B.11 Downloading Firmware to Disk Drives in a JBOD B–13
B.12 Managing Disks in the SANnet II U320 JBOD Array B–13
B.13 Troubleshooting SANnet II U320 SCSI JBOD Arrays B–13
B.13.1 Troubleshooting Configuration Issues B–13
B.13.2 Troubleshooting Hardware Issues B–14
B.13.2.1 Writing Events to a Log File for an IBM AIX Host B–15

B.13.3 Troubleshooting Flowcharts B–16

C. Connector Pinouts C–1

C.1 SCSI Host or Drive Connector C–1

C.2 RJ-45 Connector C–3

C.3 DB9 COM Port Connector C–4

D. Configuring a Solaris Server D–1

D.1 Accessing the Firmware Application On a Solaris Host D–1

D.2 Editing the sd.conf File D–2

D.3 Enabling a Solaris Host to Recognize New Devices and LUNs D–4

D.4 Labeling a Volume D–6

D.5 Making JBODs Visible to Solaris Hosts D–9

E. Configuring a Windows 200x Server or Windows 200x Advanced Server E–1

E.1 Setting Up the Serial Port Connection E–1

E.2 Accessing the Firmware Application From a Windows 200x Server E–3

E.3 Enabling a Windows 200x Server to Recognize New Devices and LUNs . . . E–4

F. Configuring a Linux Server F–1

F.1 Checking the Adapter BIOS F–1

F.2 Multiple LUN Linux Configuration F–2

F.3 Making an ext3 Filesystem for Linux F–3

F.4 Creating a Filesystem F–4

F.5 Creating a Mount Point and Mounting the Filesystem Manually F–4

F.6 Mounting the Filesystem Automatically F–4

G. Configuring an IBM Server Running the AIX Operating System G–1

G.1 Setting Up a Serial Port Connection G–1

G.2 Accessing the Firmware Application From an IBM Server Running AIX G–2

G.3 Identifying the Device On Which To Create a Logical Volume G–4

G.4 Using SMIT to Enable an AIX Host to Recognize New LUNs G–4

G.5 Creating a Volume Group G–5

G.6 Creating a Logical Volume G–6

G.7 Creating a File System G–6

G.8 Mounting the New File System G–7

G.9 Verifying That the New File System Is Mounted G–7

H. Configuring an HP Server Running the HP-UX Operating System H–1

H.1 Setting Up a Serial Port Connection H–1
H.2 Accessing the Firmware Application From an HP Server Running HP-UX . . H–2
H.3 Attaching the Disk Array H–4
H.4 Logical Volume Manager H–5
H.5 Definitions of Common Terms H–5
H.6 Creating a Physical Volume H–5
H.7 Creating a Volume Group H–6
H.8 Creating a Logical Volume H–8
H.9 Creating an HP-UX File System H–8
H.10 Mounting the File System Manually H–8
H.11 Mounting the File System Automatically H–9

Index Index–1

Preface

This manual gives step-by-step procedures for installing and initially configuring the SANnet II U320 SCSI array.

Caution – Read the *SANnet II Family Safety, Regulatory, and Compliance Manual* before beginning any procedure in this guide.

Tip – This guide is written for experienced system administrators who are familiar with Dot Hill hardware and software products.

How This Book Is Organized

This book covers the following topics:

Chapter 1 provides an overview of RAID features.

Chapter 2 covers the site planning and basic safety requirements.

Chapter 3 provides general procedures for unpacking and inspecting the array.

Chapter 4 provides procedures for cabling and for connecting to power and to the network.

Chapter 5 describes the front-panel and back-panel LEDs.

Chapter 6 describes maintenance procedures.

Chapter 7 describes troubleshooting procedures.

Appendix A provides SANnet II U320 SCSI array specifications.

Appendix B shows how to cable JBODs to one or more host servers.

Appendix C provides pinout identification for each connector.

Appendix D provides information on configuring Sun servers running the Solaris operating system.

Appendix E provides information on configuring Windows 200x servers.

Appendix F provides information on configuring Linux servers.

Appendix G provides information on configuring IBM AIX servers.

Appendix H provides information on configuring HP-UX servers.

Typographic Conventions

Typeface[1]	Meaning	Examples
`AaBbCc123`	The names of commands, files, and directories; on-screen computer output	Edit your **`.login`** file. Use **`ls -a`** to list all files. **`% You have mail`**.
text	Computer menu	Click **Start.**
AaBbCc123	Book titles, new words or terms, words to be emphasized. Replace command-line variables with real names or values.	Read Chapter 6 in the *User's Guide*. These are called *class* options. You *must* be a superuser to do this. To delete a file, type **`rm`** *filename*.

1. The settings on your browser might differ from these settings.

Related Documentation

Title	Part Number
SANnet II U320 SCSI Array Release Notes	83-00003499
SANnet II U320 SCSI Array Best Practices Manual	83-00003500
SANnet II Family Safety, Regulatory, and Compliance Manual	83-00002666
SANnet II Family RAID Firmware 4.1x User's Guide	83-00003435
SANnet II Family FRU Installation Guide	83-00002708
SANnet II Family Rack Installation Guide for 2U Arrays	83-00002365
SANscape User's Guide	83-00003431
SANscape Alert User's Guide	83-00003432
SANscape CLI User's Guide	83-00003433

Technical Support

For late-breaking *Release Notes* and all manuals for this product, go to the SANnet II SCSI array section at:

http://www.dothill.com/manuals

The following information may be required when contacting Technical Support: Dot Hill serial number and part number of hardware; version of Dot Hill supplied software; host computer platform and operating system version; description of the problem and any related error messages.

Supply the following information to facilitate our tracking system and improve our response time: customer name, company name; state and country; telephone number with area code; Internet mail address; maintenance contract number, if applicable.

Placing a Support Call

After obtaining the above information, a support call may be placed by Internet mail, fax, or telephone.

Phone: 1-877-DOT7X24 (877-368-7924)
URL: http://www.dothill.com/support/index.htm

Corporate Headquarters Contacts

United States (California) Corporate Headquarters

Tel: 1-760-931-5500 or 1-800-872-2783
Fax: 1-760-931-5527
E-mail: support@dothill.com

Netherlands: European Headquarters

Dot Hill Systems Corp., B.V. (Netherlands)
Tel: 31 (0) 53 428 4980; Fax: 31 (0) 53 428 0562
E-mail: bv@dothill.com

Japan: Japanese Headquarters

Nihon Dot Hill Systems Corp., Ltd.
Tel: 81-3-3251-1690; Fax: 81-3-3251-1691
E-mail: nihon@dothill.com

For additional sales offices in the U.K., China, Sweden, Germany, France, Israel, and Singapore, see our web site:

http://www.dothill.com/company/offices.htm

Dot Hill Welcomes Your Comments

Dot Hill is interested in improving its documentation and welcomes your comments and suggestions. You can email your comments to:

support@dothill.com

Include the part number (83-00003498) of your document in the subject line of your email.

CHAPTER 1

Product and Architecture Overview

This chapter provides a brief overview of the SANnet II U320 SCSI array, which is an LVD/SE device. Topics covered in this chapter are:

- "SANnet II U320 SCSI arrays" on page 1-1
- "Array Configurations" on page 1-2
- "SCSI Architecture" on page 1-3
- "Device Identification" on page 1-4
- "Field-Replaceable Units (FRUs)" on page 1-5
- "Interoperability" on page 1-7
- "Additional Software Tools" on page 1-8

1.1 SANnet II U320 SCSI arrays

Providing a total capacity of 10.8 terabytes, the SANnet II U320 SCSI RAID array is a high-performance, modular, storage device with a very small footprint, 3.5-inches tall by 19-inches wide (8.89-cm tall by 48.26-cm wide). The array contains one or two internal RAID controllers and up to twelve 300-Gbyte disk drives with SCSI connectivity to the data host.

Figure 1-1 Front View of a SANnet II U320 SCSI Array (RAID, Expansion Unit, or JBOD)

The RAID-equipped array is highly scalable and supports up to two expansion chassis (expansion unit arrays that have a set of drives and no controller) for a total of 36 drives. The RAID array and expansion units connect to the storage devices and consoles by means of standard serial port, Ethernet, and SCSI connections.

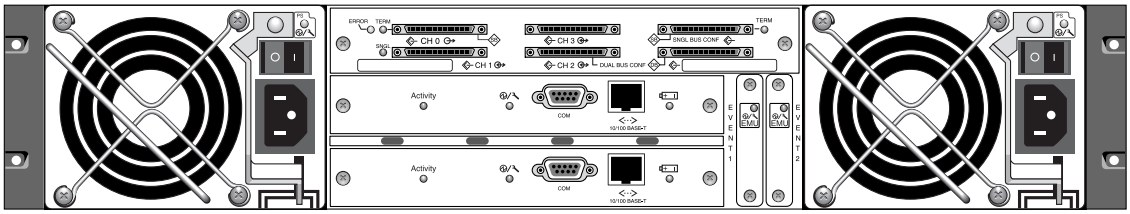

Figure 1-2 Rear View of a RAID Array

Also available is a JBOD array (Just a Bunch of Disks), which is similar to an expansion unit except that it is connected directly to a host server rather than to a RAID array.

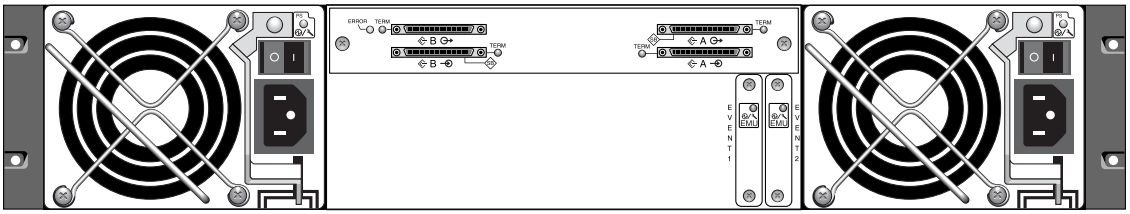

Figure 1-3 Rear View of an Expansion Unit or JBOD

Extensive reliability, availability, and serviceability (RAS) features include redundant components, notification of failed components, and the ability to replace components while the unit is online.

The RAID array can be used either as a standalone storage unit or as a building block, interconnected with expansion arrays of the same type. The array can be placed on a tabletop or rackmounted in a server cabinet or expansion cabinet.

For information about specifications and agency approvals, see Appendix A.

1.2 Array Configurations

The SANnet II U320 SCSI array can be used in the following configurations:

- **Single-controller configuration.** A RAID array can be configured with a single controller in a non-redundant configuration.
- **A RAID array with two controllers.** A RAID array can be configured with two controllers to provide full redundancy.
- **An expansion unit.** An expansion unit consists of a chassis with disk drives and I/O expansion modules. The expansion unit does not include an I/O controller module. The expansion unit connects to and is managed by a RAID array
- **A Just a Bunch of Disks (JBOD) array.** The JBOD array connects to, and is managed by, a host server.

For more information about JBODs, see Appendix B.

Table 1-1 shows the configuration options for SANnet II U320 SCSI arrays.

Table 1-1 SANnet II U320 SCSI Array Configuration Options

Internal RAID controllers	1 or 2
SCSI disks	Up to 12 per array or per expansion unit, with a minimum of 4 plus 1 spare
SCSI expansion units[1]	Up to 2
SCSI JBOD arrays[2]	1
Connection options	• Serial port • Ethernet
Supported RAID levels	0, 1, 3, 5, 1+0, 3+0, and 5+0
Redundant field-replaceable units (FRUs)	• Power supply and fan modules • Controller modules • I/O modules • Disk drive modules • EMUs (event monitoring unit)
Configuration management and enclosure event reporting options[3]	• In-band SCSI ports • Out-of-band 10/100BASE-T Ethernet port • RS-232 connectivity • Enclosure monitoring by SCSI Accessed Fault-Tolerant Enclosure (SAF-TE)

1. A disk array with no controller.

2. A disk array with no controller that is connected directly to a host computer, with no RAID array.

3. The host-based SANscape software provides a graphical user interface (GUI) and additional event-reporting capabilities.

For information about maximum disk, logical drive, and array capacity, refer to the *SANnet II Family RAID Firmware User's Guide*.

1.3 SCSI Architecture

Each RAID array has five channels with the following defaults:

- Channels 1 and 3 are host channels connected to servers. Any SANnet II U320 SCSI array host channel can be reassigned as a drive channel to connect to an expansion unit.
- Channels 0 and 2 are drive channels that connect the internal 12-disk drives in the RAID chassis, and can also be used to add expansion chassis to the configuration. Channel 2 can also be reassigned as a host channel. However, in a dual-bus configuration, channel 2 must be a drive channel.

- Channel 6 is a redundant controller communication (RCCOM) channel. Channel 6 must remain a dedicated RCCOM channel. RCCOM provides the communication channels by which two controllers in a redundant RAID array communicate with one another. This communication enables the controllers to monitor each other, and includes configuration updates, and control of cache.

For more host and drive channel information, see Chapter 4.

1.3.1 Redundant Configuration Considerations

This section provides information about setting up redundant configurations for increased reliability. For more detailed information about configuration requirements, refer to the *SANnet II Family RAID Firmware User's Guide* and the *SANnet II U320 SCSI Array Best Practices Manual*.

SCSI is applied to storage configurations with topologies that aim to avoid loss of data because of component failure. As a rule, the connections between source and target should be configured in redundant pairs.

The recommended host-side connection consists of two or more host bus adapters (HBAs). Each HBA is used to configure a connection between the host computer and the array.

In the unlikely event of controller failure, the standby channels on the remaining controller become an I/O route serving the host I/O originally directed to the failed channel on its pair of controllers. Moreover, application failover software should be running on the host computer to control the transfer of I/O from one HBA to another in case either data path fails.

1.4 Device Identification

A label on the lower lip of an array chassis, underneath the front bezel, indicates whether it is a JBOD array or a RAID array. For instance, "SANnet II U320 AC JBOD" refers to an alternating-current version of a SANnet II U320 JBOD array, "SANnet II U320 DC JBOD" refers to a direct-current version of a JBOD array, and "SANnet II U320 AC RAID" refers to an alternating-current version of a RAID array.

For a list of supported racks and cabinets, refer to the release notes for the model of array that you are installing.

Reliability, availability, and serviceability (RAS) are supported by:

- Redundant components
- Notification of failed components
- Components that are replaceable while the unit is online

For information about specifications and agency approvals, see Appendix A.

1.5 Field-Replaceable Units (FRUs)

This section describes the FRUs contained in the SANnet II U320 SCSI array.

1.5.1 RAID I/O Controller Modules

A dual-controller configuration offers increased reliability and availability because it eliminates a single point of failure, the controller. In a dual-controller configuration, if the primary controller fails, the array automatically fails over to the second controller without an interruption of data flow.

SANnet II U320 SCSI array I/O controller modules are hot-serviceable. SANnet II U320 SCSI array RAID controller modules provide four SCSI ports. Single-controller and dual-controller models are available. Each RAID controller is configured with 1 gigabyte (Gbyte) of cache.

In the unlikely event of an I/O controller module failure, the redundant RAID controller immediately begins servicing all I/O requests. The failure does not affect application programs.

Each RAID I/O controller module can support up to 1 gigabyte of Synchronous Dynamic Random Access Memory (SDRAM) with Error Control Check (ECC) memory. In addition, each controller supports 64 megabytes (Mbyte) of on-board memory. One Application Specific Integrated Circuit (ASIC) controller chip handles the interconnection between the controller bus, DRAM memory, and Peripheral Component Interconnect (PCI) internal buses. It also handles the interface between the on-board 2-Mbyte flash, 32-Kbyte nonvolatile random access memory (NVRAM) RS-232 port chip, and 10/100 BASE-T Ethernet chip.

The RAID I/O controller module is a multifunction board. I/O controller modules include the SCSI Accessed Fault-Tolerant Enclosure (SAF-TE) logic and the RAID controller. The SAF-TE logic monitors various temperature thresholds, fan speed from each fan, voltage status from each power supply, and the FRU ID.

Each RAID I/O controller module incorporates the SAF-TE direct-attached capability to monitor and maintain enclosure environmental information. The SAF-TE controller chip monitors all internal +12 and +5 voltages, various temperature sensors located throughout the chassis, and each fan. The SAF-TE also controls the front-panel and back-panel LEDs and the audible alarm. Both the RAID chassis and the expansion chassis support dual SAF-TE failover capabilities for fully redundant event monitoring.

1.5.2 I/O Expansion Modules

The hot-serviceable I/O expansion modules provide four ports but do not have battery modules or controllers. I/O expansion modules are used with I/O controller modules in non-redundant SANnet II U320 SCSI arrays, and in expansion units and SANnet II U320 SCSI JBODs.

1.5.3 Disk Drives

Each disk drive is mounted in its own sled assembly. Each sled assembly has EMI shielding, an insertion and locking mechanism, and a compression spring for maximum shock and vibration protection.

Each disk drive is slot-independent, meaning that once a logical drive has been initialized, the system can be shut down and the drives can be removed and replaced in any order. In addition, disk drives are field-upgradeable to larger drives without interruption of service to user applications. The drive firmware is also field-upgradeable, but the firmware upgrade procedure requires interruption of service.

In the event of a single disk drive failure, with the exception of RAID 0, the system continues to service all I/O requests. Either mirrored data or parity data is used to rebuild data from the failed drive to a spare drive, assuming one is assigned. If a spare is not assigned, you have to manually rebuild the array.

In the unlikely event that multiple drive failures occur within the same logical drive, data that has not been replicated or backed up might be lost. This is an inherent limitation of all RAID subsystems and could affect application programs.

An *air management sled* FRU is available for use when you remove a disk drive and do not replace it. Insert an air management sled into the empty slot to maintain optimum airflow through the chassis.

The drives can be ordered in 36-Gbyte, 73-Gbyte, 146-Gbyte, and 300-Gbyte sizes. Thirty-six-gigabyte drives have a rotation speed of 15,000 RPM while 146-Gbyte and 300-Gbyte drives have a rotation speed of 10,000 RPM. Seventy-three-gigabyte drives have a rotation speed of 10,000 and 15,000 RPM.

Caution – You can mix disk drive capacity in the same chassis, but not spindle speed (RPM) on the same SCSI bus. For instance, you can use 36-Gbyte and 73-Gbyte drives with no performance problems if both are 10K RPM drives. Violating this configuration guideline leads to poor performance.

1.5.4 Battery Module

The battery module is designed to provide power to system cache for 72 hours in the event of a power failure. When power is reapplied, the cache is purged to disk. The battery module is a hot-swappable FRU that is mounted on the I/O board with guide rails and a transition board. It also contains the EIA-232 and DB9 serial interface (COM) ports. Hot-swappable means that a live upgrade can be performed. The battery FRU can be removed and replaced while the RAID array is powered on and operational.

1.5.5 Power and Fan Modules

Each array contains redundant (two) power and fan modules. Each module contains a 420-watt power supply and two radial 52 cubic feet per minute (CFM) fans. Power module autoranging capabilities range:

- **AC Power Supply**. From 90 Volts Alternating Current (VAC) to 264 VAC.
- **DC Power Supply**. From –36 Volts Direct Current (VDC) to –72 VDC.

A single power and fan module can sustain an array.

1.6 Interoperability

The array is designed for heterogeneous operation and supports the following operating systems:

- Solaris versions 8, 9, and 10
- Sun™ Linux 5.0 on the Sun LX50 server
- Red Hat Linux
- Windows 2000 Advanced Server and Windows 2003 Server
- IBM AIX
- HP-UX

Note – For information about supported versions of these operating systems, refer to the release notes for your array.

The array does not require any host-based software for configuration, management, and monitoring, which can be handled through the built-in firmware application. The console window can be accessed by means of the DB9 communications (COM) port using the **`tip`** command, or by means of the Ethernet port using the **`telnet`** command.

1.7 Additional Software Tools

The following additional optional software tools are available on the web site or your purchased software CD:

- SANscape, a management and monitoring program
- SANscape Alert software, a monitoring utility
- SANscape CLI, a command-line utility to download firmware and to view the event log.

See the web site or installation CD for the additional user guides.

CHAPTER 2

Site Planning

This chapter outlines the site-planning requirements and basic safety requirements for the installation and use of SANnet II U320 SCSI arrays. Customers are asked to complete a "Preinstallation Worksheet" on page 2-6 and to prepare the site for installation according to the worksheet details and the specified site-planning requirements.

Review the details of this chapter before installing a SANnet II U320 SCSI array. Topics covered in this chapter are:

- "Customer Obligations" on page 2-1
- "Safety Precautions" on page 2-2
- "Environmental Requirements" on page 2-3
- "Electrical and Power Specifications" on page 2-3
- "Physical Specifications" on page 2-4
- "Layout Map" on page 2-4
- "Console and Other Requirements" on page 2-6
- "Preinstallation Worksheet" on page 2-6

Note – Refer to the *SANnet II U320 SCSI Array Release Notes* for the current lists of supported operating systems, host platforms, software, and qualified cabinets.

2.1 Customer Obligations

The customer is obliged to inform Dot Hill of any and all ordinances and regulations that would affect installation.

Caution – When selecting an installation site for the SANnet II U320 SCSI array, choose a location that avoids excessive heat, direct sunlight, dust, or chemical exposure. Such exposure greatly reduces the product's longevity and might void your warranty.

The customer is responsible for meeting all government codes and regulations concerning facilities. The customer is also responsible for compliance with the following requirements:

- Meet all local, national, and international codes covered in this specification. The subjects covered include fire and safety, building, and electrical codes.
- Document and inform Dot Hill of any deviations from this specification.

2.2 Safety Precautions

For your protection, observe the following safety precautions when setting up your equipment:

- Follow all safety precautions and requirements specified in the *SANnet II Family Safety, Regulatory, and Compliance Manual.*
- A fully loaded array weighs over 57 pounds (26 kilograms). Use two people to lift the array to avoid injury.
- Follow all cautions and instructions marked on the equipment.
- Ensure that the voltage and frequency of your power source match the voltage and frequency inscribed on the equipment's electrical rating label.
- Never push objects of any kind through openings in the equipment. Dangerous voltages may be present. Conductive foreign objects could produce a short circuit that could cause fire, electric shock, or damage to your equipment.
- To reduce the risk of electric shock, do not plug Dot Hill products into any other type of power system. Dot Hill products are designed to work with single-phase power systems having a grounded neutral conductor. Contact your facilities manager or a qualified electrician if you are not sure what type of power is supplied to your building.
- Your Dot Hill product is shipped with a grounding-type (three-wire) power cord. To reduce the risk of electric shock, always plug the cord into a grounded power outlet.
- Do not use household extension cords with your Dot Hill product. Not all power cords have the same current ratings. Household extension cords do not have overload protection and are not meant for use with computer systems.
- Do not block or cover the openings of your Dot Hill product. Never place a Dot Hill product near a radiator or heat register. Failure to follow these guidelines can cause overheating and affect the reliability of your Dot Hill product.

2.3 Environmental Requirements

Table 2-1 lists the environmental specifications for the SANnet II U320 SCSI array.

Table 2-1 Environmental Specifications

	Operating	Non-Operating
Altitude	To 9000 feet (3000 meters)	To 36,000 feet (12,000 meters)
Temperature (rack-mounted)	41°F to 95°F (5°C to 35°C)	–104°F to 149°F (–40°C to +65°C)
Temperature (desktop)	41°F to 104°F (5°C to 40°C)	–104°F to 149°F (–40°C to +65°C)
Humidity Range	10% to 90% RH at 80.6°F (27°C) max wet bulb (noncondensing)	0 to 93% at 100.4°F (38°C) (noncondensing)

2.3.1 Electromagnetic Compatibility (EMC)

The following is required for all installations:

- All AC mains and supply conductors to power distribution boxes for both the rackmounted array and the desktop array must be enclosed in a metal conduit or raceway when specified by local, national, or other applicable government codes and regulations.
- The supply conductors and power distribution boxes (or equivalent metal enclosure) must be grounded at both ends.
- The supplied arrays require voltages within minimum fluctuation.
- The facilities voltage supplied by the customer must maintain a voltage of not more than (+/–) 5 percent. The customer facilities must provide suitable surge protection.

2.4 Electrical and Power Specifications

All SANnet II U320 SCSI arrays require two independent power sources. Each array has two power-supply-and-fan modules for redundancy.

Each SANnet II U320 AC array requires two 115-VAC/15A or two 240-VAC service outlets. All AC power supplies are autoranging and are automatically configured to a range of 90 to 264 VAC and 47 to 63 Hz. There is no need to make special adjustments.

Each DC array requires two –48 VDC service outlets, and has a input voltage range of –36 VDC to –72 VDC.

Note – To ensure power redundancy, connect the two SANnet II U320 SCSI power modules to two separate circuits (for example, one commercial circuit and one UPS).

Table 2-2 Power Specifications

AC power:	Voltage and frequency 90 to 264 VAC, 47 to 63 Hz
Input current:	5A max
Power-supply output voltages:	+5 VDC and +12 VDC
DC power:	–48 VDC (–36 VDC to –72 VDC)

2.5 Physical Specifications

Use the following physical specifications to plan the location of your array.

Table 2-3 Physical Specifications

Category	Description
Dimensions	2U (3.5-in.) height 20-in.(50.8 cm) chassis depth 17.5-in.(19 in.with ears) width
Installation clearances	For FRU removal and replacement, 15-in. (37 cm) is required front and back.
Cooling clearances	6-in. (15 cm) is required front and back. No cooling clearance is required on the sides or the top and bottom of the array.

2.6 Layout Map

It is helpful to create a sketch or layout map to indicate the exact location for the SANnet II U320 SCSI array installation as well as the location of the hosts, console, and Ethernet connections that will be connected to it.

As you lay out the components, consider the cable lengths that will be used.

2.6.1 Rack Placement

Follow these guidelines when preparing a rackmount placement for your system.

- Ensure that the floor surface is level.
- Leave enough space in front of the rack to access components for servicing.
- Leave enough space in back of the rack to access components for servicing.

- Keep power and interface cables clear of foot traffic. Route cables inside walls, under the floor, through the ceiling, or in protective channels or raceways.
- Route interface cables (excluding fiber-optic cables) away from motors and other sources of magnetic or radio frequency interference.
- Stay within the cable length limitations.
- Provide two separate power sources for the array. These power sources must be independent of each other, and each must be controlled by a separate circuit breaker at the power distribution point.

2.6.2 Tabletop Placement

SANnet II U320 SCSI arrays can be positioned on a desk or a table. Follow these guidelines when preparing a tabletop placement for your system.

- Choose a desk or a table that can support 57.2 pounds (26 kg) for one fully-configured array or 116 pounds (52 kg) for two arrays.
- Do not place the array on the edge of the table. Set the array so that at least 50 percent of the array is inside the table or desk leg support area. Failure to do this might cause the table to tip over.
- Leave enough space in front and in back of the array to access components for servicing. To remove the components requires a clearance of 15 inches (37 cm) in front and in back of the array.
- Provide a minimum space of 6 inches (15 cm) in front and in back of the array for adequate airflow.
- Keep power and interface cables clear of foot traffic. Route cables inside walls, under the floor, through the ceiling, or in protective channels or raceways.
- Route interface cables away from motors and other sources of magnetic or radio frequency interference.
- Stay within the cable length limitations.
- Ensure that the operating system for the array does not exceed the specifications.
- Use two people to lift the array to avoid injury. The array can weigh up to 57.2 pounds (26 kg).
- Do not place the array in a vertical position. Place the array horizontally.
- If you are installing multiple arrays you can stack up to five arrays on top of each other. Do not stack more than five arrays in one stack.
- Provide two separate power sources for the array. These power sources must be independent of each other, and each must be controlled by a separate circuit breaker at the power distribution point.

2.7 Console and Other Requirements

A console with at least one serial port connection is necessary for installation and configuration of your SANnet II U320 SCSI array. Once you have configured your array with an IP address, an Ethernet port can also be useful for configuring the array.

Note – SANnet II family arrays require at least CAT-5 Ethernet cable.

See the following preinstallation worksheet for additional preparation details.

2.8 Preinstallation Worksheet

When ordering a SANnet II U320 SCSI array, complete the following preinstallation worksheet and then prepare the site for installation according to the site-planning requirements.

You are responsible for ensuring that the site consistently conforms to all stipulated standards, and that necessary peripherals are made available to the engineer during installation.

Review the details of your specific survey before installing your SANnet II U320 SCSI array.

If necessary, attach or sketch a network diagram to the survey.

Table 2-4 Preinstallation Worksheet

Rackmounting	Customers must ensure that the appropriate service outlets are available for installation. Requirements vary. Will the SANnet II U320 SCSI array be rackmounted? Yes / No • Is the rack supplied by Dot Hill? Yes / No • If yes, include Dot Hill model number: ____ • If not, make/model: _____ / _____ Does the rack mount: • Front and back? If so, depth? _____ • Center/Telco? _____ What cable lengths are required? _____ ** Diagram preferred ** Are there any power strips or power sequencers in the rack? Yes / No Are they supplied by Dot Hill? Yes / No If yes, part number: _____ If not, quantity of plugs/outlets required: _____ / _____
IP address	Array IP address: _____._____._____._____ Array network mask: _____._____._____._____
Cabling	SCSI cable lengths to connect to hosts: _____

Table 2-5 Host Connectivity Summarized

Host Connectivity - Host #1

Host Name: _____

Host Make/Model: _____

HBA connector types: _____

Cable distance from the array to the host(s): _____

Operating system: _____

Patches installed: _____

IP addresses:
- Network _____
- Host _____

Host Connectivity - Host #2

Host Name: _____

Host Make/Model: _____

HBA connector types: _____

Cable distance from the array to the host(s): _____

Operating system: _____

Patches installed: _____

IP addresses:
- Network _____
- Host _____

CHAPTER 3

Unpacking Your SCSI Array

This chapter describes the procedure for unpacking the SANnet II U320 SCSI array package. Topics covered in this chapter are as follows:

- "Opening Your Package" on page 3-1
- "Checking the SANnet II U320 SCSI Array Package Contents" on page 3-2
- "Field-Replaceable Units" on page 3-3
- "Customer-Provided Cables" on page 3-3
- "Mounting Your Array in a Rack or Cabinet" on page 3-3

3.1 Opening Your Package

Follow these guidelines for unpacking the equipment.

Caution – Always use two people to remove the unit from its container, to avoid personal injury or damage to the equipment during installation. A fully loaded unit weighs approximately 57.2 pounds (26 kilograms).

1. Select a suitable area for unpacking.
2. Store all packing material and boxes for possible equipment returns.
3. Check the Contents Sheet in your product package. See "Checking the SANnet II U320 SCSI Array Package Contents" on page 3-2.

   The Contents Sheet summarizes the standard contents for your product.
4. Compare the packing slip and the list of parts with the items you received.

   If the list of parts on your packing slip does not match the items you received, or any items appear damaged, immediately notify your carrier agent and the supplier who prepared your shipment.
5. Carefully examine the cables provided in the package.

   If any cable appears to be damaged, contact the Technical Service department for an immediate replacement.

6. Check the list of "Customer-Provided Cables" on page 3-3.

   These are required to complete your installation.

Caution – You must purchase or provide 320M-compliant SCSI cables for connecting the SANnet II U320 SCSI array to host servers.

3.2 Checking the SANnet II U320 SCSI Array Package Contents

It is important to inspect your SANnet II U320 SCSI array packages for standard items as well as purchased options before you begin installation. If any parts are missing or damaged, contact your sales representative immediately.

Quantity	Item
1	One or more of the following SANnet II U320 SCSI arrays: • SANnet II U320 SCSI array with single controller • SANnet II U320 SCSI array with dual controllers • SANnet II U320 Expansion Unit or JBOD (a group of disks, no controller)
1	• *SANnet II U320 SCSI Array Contents Sheet* • To download and print the latest *SANnet II U320 SCSI Array Release Notes*, go to: http://www.dothill.com/manuals
1	One CD for user documentation
1	SCSI jumper cable, 1-foot (30cm), VHDCI-VHDCI (for bus setting)
1	SCSI jumper cable, 1.5-foot (45cm), VHDCI-VHDCI (if you ordered a JBOD or expansion unit)
1	Serial null modem cable
1 or 2	Shielded CAT-5 Ethernet cable, one per controller in each array
1	Cable adapter, DB9-to-DB25
2	DC power cables if you ordered a DC-powered array [1]
2	AC power cables if you ordered an AC-powered array (shipped separately as part of the country kit). [1]
2	AC cord locks in a plastic bag if you ordered an AC-powered array
2	Front-bezel keys in a plastic bag, to secure the front bezel onto the chassis
Various	Purchased options. These options are ordered at the time of purchase and are integrated into or added to the unit prior to delivery.

1. Caution: The power cables for SANnet II products are designed only for SANnet II products and should not be used with other equipment.

3.3 Field-Replaceable Units

Check that you received all field-replaceable units (FRUs) ordered with your SANnet II U320 SCSI array. For additional FRUs, consult your sales representative. For instructions on how to install or replace FRUs, review the following manuals located on the product web site:

- *SANnet II Family Rack Installation Guide for 2U Arrays*
- *SANnet II Family FRU Installation Guide*

Caution – You can mix capacity in the same chassis, but not spindle speed revolutions per minute (RPM) on the same SCSI bus. For instance, you can use 36-Gbyte and 73-Gbyte drives with no performance problems if both are 10K RPM drives. Violating this configuration guideline leads to poor performance.

For a list of the FRU part numbers, refer to the *SANnet II Family FRU Installation Guide*.

3.4 Customer-Provided Cables

Customers must provide the following cables.

- One Ultra 320 SCSI cable per host to connect a host to a RAID array, expansion unit or JBOD; up to two host cables might be needed per array.

To obtain qualified cables, consult your Dot Hill sales representative.

3.5 Mounting Your Array in a Rack or Cabinet

Refer to the *SANnet II Family Rack Installation Guide for 2U Arrays* for instructions on how to install and prepare a rack or cabinet for mounting your array.

CHAPTER 4

Connecting Your SCSI Array

This chapter provides procedures for connecting the array to power and to network devices and for cabling the SANnet II U320 SCSI RAID array for single-bus or split-bus configurations.

For details on cabling the SANnet II U320 SCSI JBOD array, see Appendix B.

The topics covered in this chapter are as follows:

- "Converting Your Front Bezel Locks So the Keys Cannot Be Removed" on page 4-2
- "Hardware Connections" on page 4-4
- "Connecting the Chassis to an AC Power Outlet" on page 4-5
- "Connecting the Chassis to DC Power Outlets" on page 4-7
- "Powering Up and Checking LEDs" on page 4-8
- "Single-Bus and Split-Bus Configurations" on page 4-9
- "Connecting Cables for a Single-Bus Configuration" on page 4-11
- "Connecting Cables for a Split-Bus Configuration" on page 4-14
- "Connecting Ports to Hosts" on page 4-19
- "Cabling to Expansion Units" on page 4-20
- "Establishing Communications With An Array" on page 4-26
- "Setting Up Out-of-Band Management Over Ethernet" on page 4-30
- "Remaining Steps" on page 4-31
- "Power-On Sequence" on page 4-32
- "Power-Off Procedure" on page 4-32

Before you connect the SANnet II U320 SCSI array to the network, position the SANnet II U320 SCSI array in the rack or in the location where it will remain.

Caution – When positioning the array, do not block the air vents at the front or rear of the unit. Follow all safety precautions specified in the *SANnet II Family Safety, Regulatory, and Compliance Manual*.

Caution – When you power off the array, wait five seconds before you power it back on. If you power the array off and on too quickly, a race condition might occur.

4.1 Converting Your Front Bezel Locks So the Keys Cannot Be Removed

The bezel on your array has two locks whose keys can be removed when the locks are in either the locked or open position. It is possible to reconfigure the locks so that the keys cannot be removed.

Figure 4-1 Front Bezel and Front Bezel Locks of an Array

To change the locks so the keys cannot be removed, follow these steps.

1. Remove the bezel by gently pivoting the swing arms out of their ear sockets.

   See "Removing the Front Bezel and Ear Caps" on page 6-8 for step-by-step instructions on how to remove the bezel.

2. Make sure the key is in the locked position, with the pawl extending horizontally past the edge of the bezel.

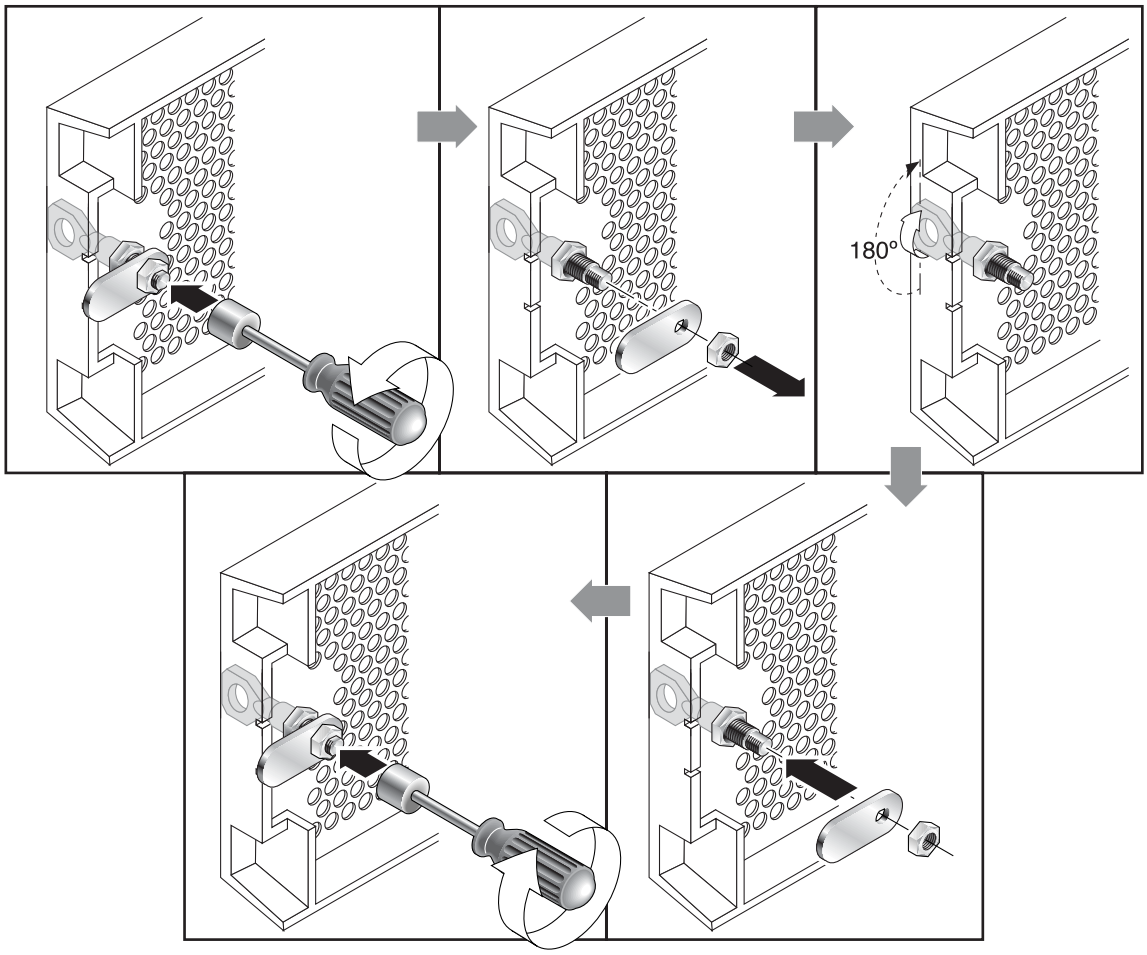

Figure 4-2 Sequence of Steps to Change Front Bezel Locks So Keys Cannot Be Removed

3. Hold the key in place and use a 12-mm or 3/8-inch nut driver to remove the locking nut that holds the pawl in place, as shown in the first panel of Figure 4-2.

Caution – Be sure to hold the key in place. Otherwise there is a risk of breaking the small tab on the lock that serves as a stop.

4. Lift the pawl off the threaded part of the lock body, as shown in the second panel of Figure 4-2.
5. Set the pawl aside, face up, so that you can remember its orientation when you replace it.
6. Use the key to turn the lock 180 degrees, as shown in the third panel of Figure 4-2.
7. Replace the pawl in the same orientation as before, as shown in the fourth panel of Figure 4-2.

8. Hold the key in place and use the nut driver to refasten the locking nut that holds the pawl in place, as shown in the fifth panel of Figure 4-2. Be careful not to cross-thread the nut.
9. Replace the bezel.

Note – To convert your bezel locks back so that the keys can be removed, repeat this procedure.

4.2 Hardware Connections

Figure 4-3 identifies a typical series of hardware connections used when you install an array. These procedures are designed for a redundant SANnet II U320 SCSI configuration.

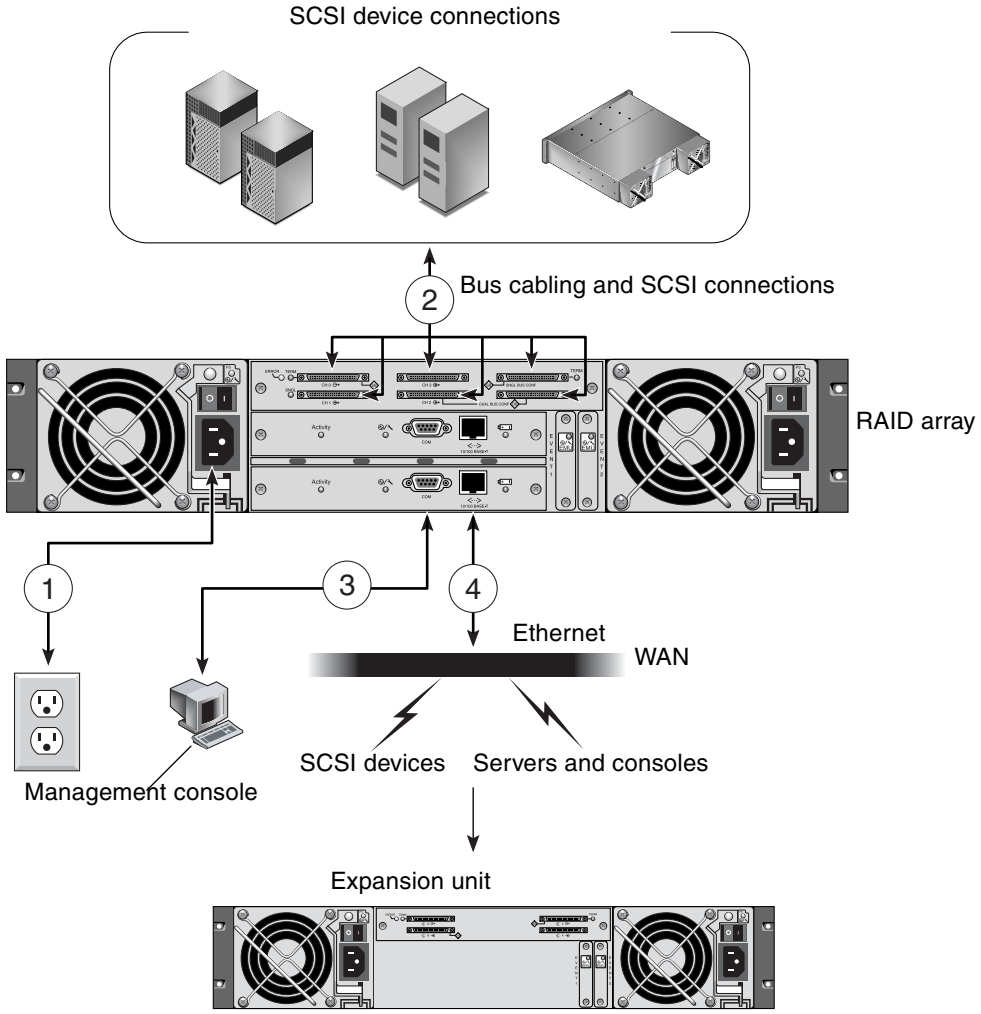

Figure 4-3 Typical Sequence of Installation Steps for the SANnet II U320 SCSI Array

4.3 Connecting the Chassis to an AC Power Outlet

When you connect the AC power cords, you should install the provided two cord locks at the same time. The provided AC cord locks are used to securely fasten the AC cable connectors.

Caution – For AC power: If the array is connected to AC power sources not within the designated 90–135, 180–265 VAC PFC range, damage might occur to the unit.

Note – To ensure power redundancy, be sure to connect the two power supply modules to two separate circuits (for example, one commercial circuit and one UPS).

To connect the AC power cords, perform the following procedure:

1. Obtain an appropriate AC power cable.

Caution – The power cables for SANnet II products are designed only for SANnet II products and should not be used with other equipment.

2. Use a screwdriver to remove the screw and cylindrical standoff from one of the two cord locks provided and set them aside for reassembly later.

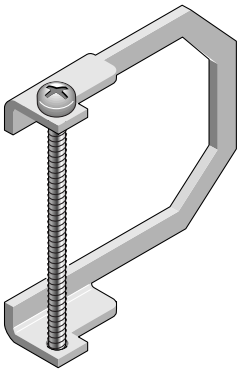

Figure 4-4 AC Cord Lock

3. Slide the cord lock over the AC power connector.
4. Hold the cylindrical standoff between the two screw-holes on the flanges of the cord lock.
5. Insert the screw into the first screw-hole, through the standoff, and then into the threaded screw-hole on the other flange.
6. Tighten the screw with a screwdriver until the flanges bottom out on the cylindrical standoff.
7. Push the power cord into the power supply receptacle until it is firmly seated.
8. Push the green ejector handle forward until it is seated against the power supply.
9. Turn the thumbscrew of the green ejector handle clockwise until it is finger-tight to secure the handle and the cord lock.

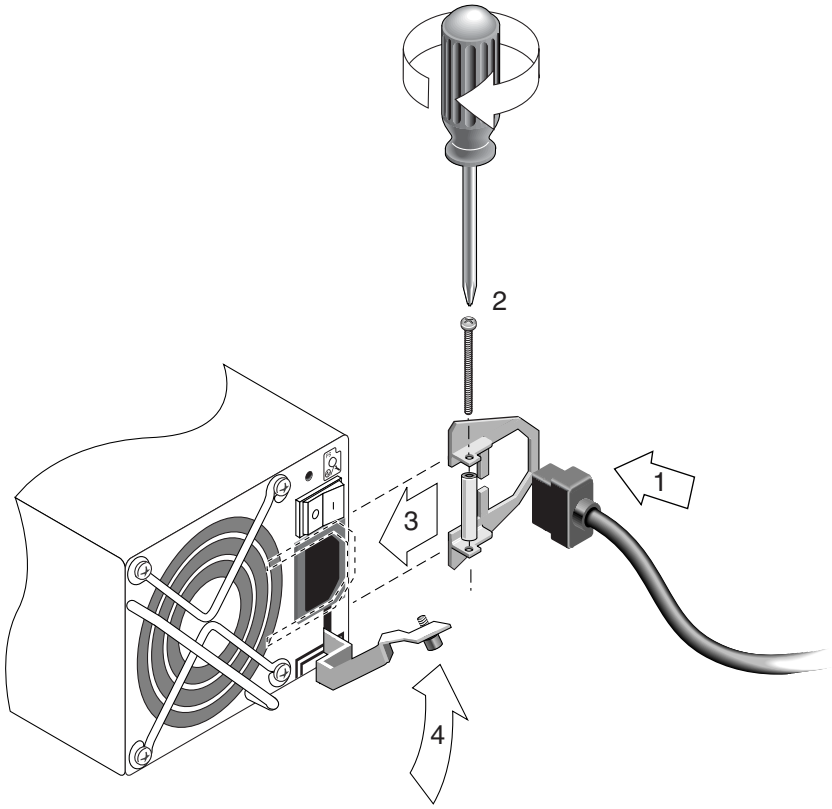

Figure 4-5 Inserting the Cord Lock

10. Repeat this procedure for the second cord lock and second power cable.

4.4 Connecting the Chassis to DC Power Outlets

Two DC power cords are packaged with each DC array. To connect the DC power cords, perform the following procedure.

1. Connect a DC power cable to the first power supply and to a power outlet.

Caution – Use only the DC power cables provided with the array. The power cables for SANnet II products are designed only for SANnet II products and should not be used with other equipment.

2. Check the DC cable part number and wire labels carefully before connecting the cable to the source.

Table 4-1 DC Cable Wiring for Cable 35-00000191

Pin Number	Voltage	Color
A3	Return	Red
A2	GND (Chassis Ground)	Green/Yellow
A1	–48 VDC	Black

Caution – If the array is connected to DC power sources not within the designated –48V DC (–36 VDC to –72 VDC) range, damage might occur to the unit.

Note – To ensure power redundancy, be sure to connect the two power supply modules to two separate circuits (for example, one commercial circuit and one UPS).

Note – To extend the length of the DC power cable as needed, strip the last 1/4 inch of the cable, insert the stripped end into a provided *Panduit* tube, and crimp the tube.

3. Tighten the cable locking screws to attach the cable securely to the power supply power outlet.
4. Connect the second power cable to the second power supply and to a second power outlet. Tighten the cable locking screws.

   If one power supply fails, the second power supply automatically takes the full load.

4.5 Powering Up and Checking LEDs

Perform the initial check of the array according to the following procedure.

1. Connect two AC (or DC) power cables to the power and fan modules on the back of the array.

Caution – The power cables for SANnet II products are designed only for SANnet II products and should not be used with other equipment.

2. Power on the array by turning on each power switch.

   See “Power-On Sequence” on page 4-32 for the power-up sequence to use when operating RAID arrays and expansion units. See Appendix B for the power-up sequence to use when operating standalone SANnet II U320 SCSI JBODs directly attached to hosts.

3. Check for the following LED activity:

   All front-panel LEDs flash green to indicate good operation.

Note – Whenever media scan is running on a drive, its front-panel LED flashes green. It is normal for almost all front-panel drive LEDs to flash green unless media scanning is terminated. For more information, refer to the *SANnet II Family RAID Firmware User's Guide*.

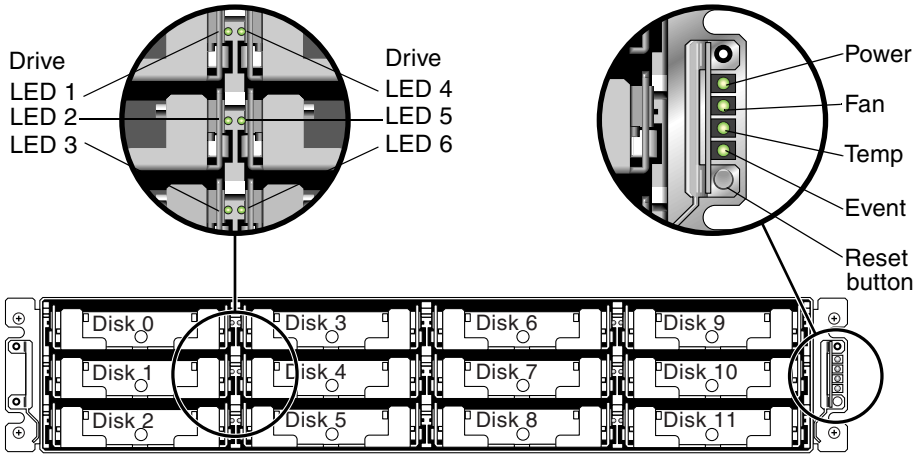

Figure 4-6 Front Panel of the SANnet II U320 SCSI Array With LEDs Displayed

See Chapter 5 for more information about the array's LEDs.

4.6 Single-Bus and Split-Bus Configurations

The drive-bus configuration determines how drives and drive IDs are assigned to drive channels on the controller.

A single-bus configuration assigns all disk drive IDs in a controller to one channel (typically CH 0 for the RAID array and CH 2 for an expansion unit).

A split-bus configuration assigns half the disk drive IDs to CH 0 and the other half to CH 2 in the RAID array, and then typically adds more disk drive IDs to both CH 0 and CH 2 when it is connected to an expansion unit.

Each drive channel can have up to 16 IDs (0 to 15); ID 6 and ID 7 are reserved for internal connections.

On the back panel of each RAID array on the I/O module, the SB icon is displayed next to the CH 0 port and the SCSI SNGL BUS CONF port to indicate where to connect the SCSI jumper cable for a single-bus configuration.

Similarly, the DB icon is displayed next to the CH 2 port and the split-bus CONF port to indicate where to connect the SCSI jumper cable for a split-bus configuration.

Figure 4-7 Single-Bus and Split-Bus Icons

On the back panel of each expansion unit, the SB icon indicates where to connect the jumper cable for a single-bus configuration.

The physical drive IDs are also displayed on the lower inside-front edge of the chassis. These IDs are automatically assigned and appear in the RAID controller status tables.

DUAL/SNGL	DUAL/SNGL	DUAL/SNGL	DUAL/SNGL
CH2-ID0 CH0-ID0	CH2-ID3 CH0-ID3	CH0-ID0 CH0-ID8	CH0-ID3 CH0-ID11
CH2-ID1 CH0-ID1	CH2-ID4 CH0-ID4	CH0-ID1 CH0-ID9	CH0-ID4 CH0-ID12
CH2-ID2 CH0-ID2	CH2-ID5 CH0-ID5	CH0-ID2 CH0-ID10	CH0-ID5 CH0-ID13

Figure 4-8 Disk Drive IDs Displayed Inside the Lower Edge of the Chassis

4.6.1 Default Channel Settings

SANnet II U320 SCSI arrays are preconfigured with the default channel settings shown in Figure 4-9. The most common reason to change a host channel to a drive channel is to attach expansion units to a RAID array.

When configuring an array:

- Channel 0 must be a drive channel.
- Channel 1, 2, or 3 can be host or drive channels.

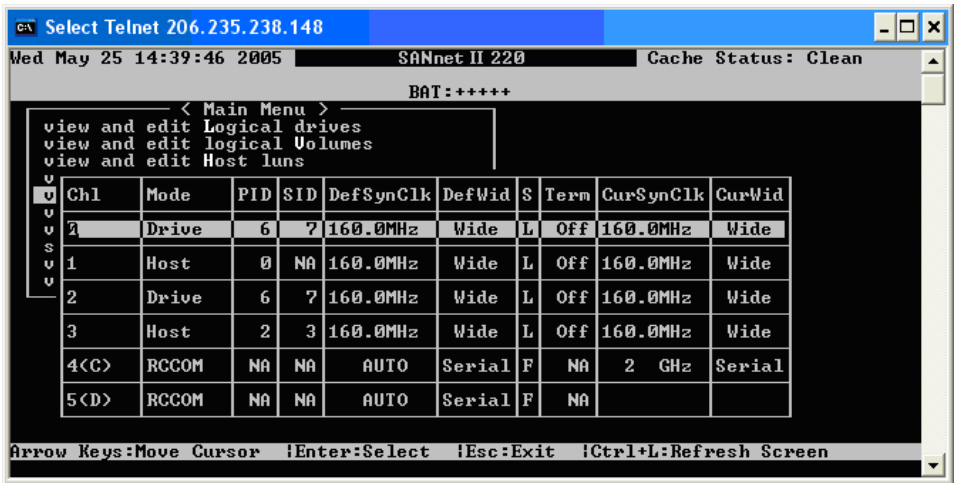

Figure 4-9 SANnet II U320 SCSI Array Default Channel Settings

After you cable the array, modify the host or drive channels as needed using the firmware application. For information about how to change channel settings, refer to the *SANnet II Family RAID Firmware User's Guide*.

Note – When adding a host channel ID, ID6 and ID7 are reserved for host HBAs.

4.7 Connecting Cables for a Single-Bus Configuration

A single-bus I/O configuration assigns all disk drive IDs in a chassis (RAID or expansion unit) to one channel. This configuration is convenient administratively if you want to assign all RAID array drive IDs to channel 0, and assign all expansion unit drive IDs to channel 2.

1. To configure a RAID array as a single-bus configuration, connect the SCSI jumper cable between the SCSI ports labeled "CH 0" and "SNGL BUS CONF" as shown in Figure 4-10. Tighten the cable jack screws with six full clockwise turns to ensure proper connection and operation.

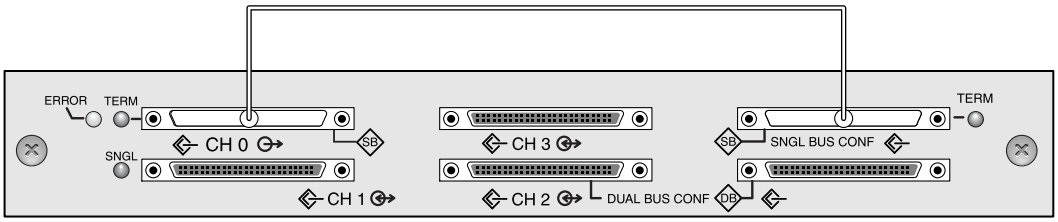

Figure 4-10 Single-Bus Connection: All Drives are Assigned to a Single Channel (CH 0)

2. To configure an expansion unit as a single-bus configuration, connect the SCSI jumper cable between SCSI ports (lower left and upper right ports), as shown in Figure 4-11. Tighten the cable jack screws with six full clockwise turns to ensure proper connection and operation.

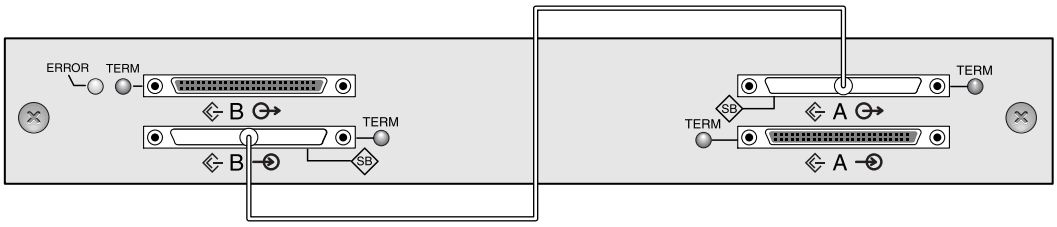

Figure 4-11 Required Jumper Cabling for a Single-Bus Expansion Unit

Caution – A maximum of 16 drive IDs is allowed per channel. Therefore, with a 12-drive array, do not connect a split-bus channel 0 or channel 2 (6 IDs) to a single-bus expansion unit (12 IDs).

3. (Optional) Use a SCSI cable to connect a RAID array (channel 2 port) to an expansion unit (lower right port). Tighten the cable jack screws with six full clockwise turns to ensure proper connection and operation.

   The configuration in Figure 4-12 shows a RAID array with all its drive IDs assigned to channel 0, and an expansion unit with all its drive IDs assigned to channel 2.

Note – In a single-bus configuration with an expansion unit, the jumper cable must be attached to the lower left and upper right ports. The host connection must be connected to the lower right port of the expansion unit.

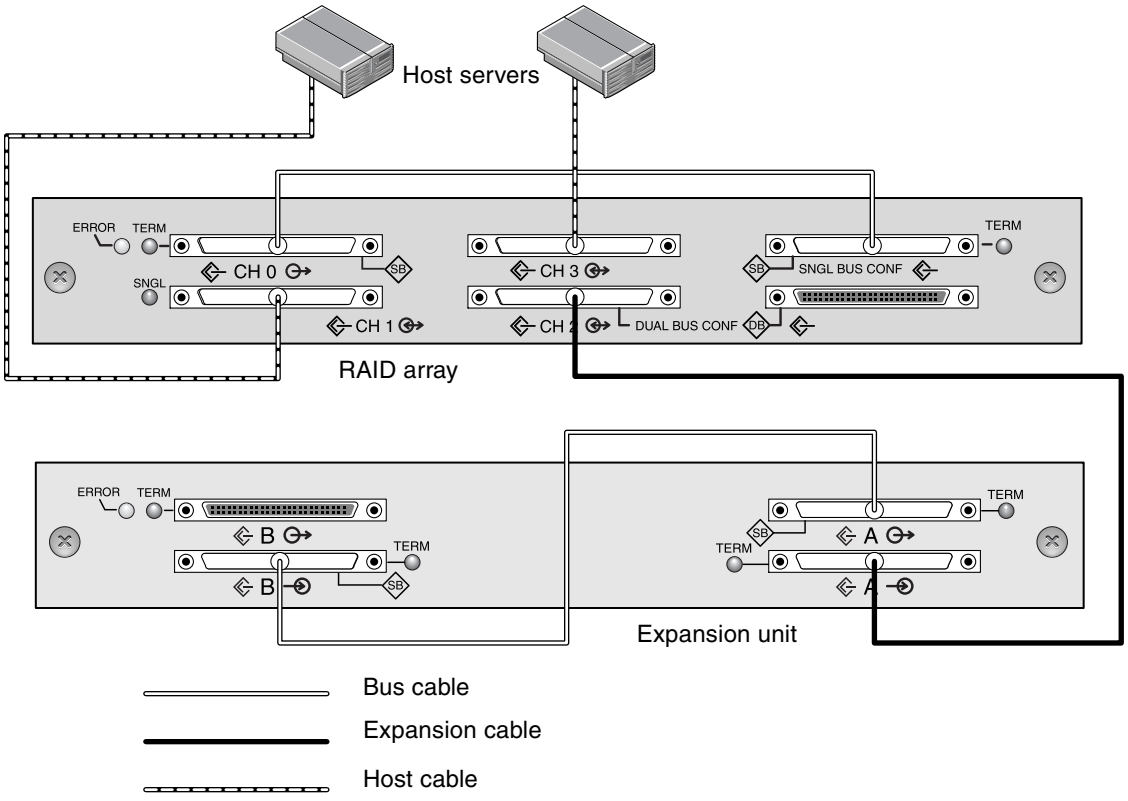

Figure 4-12 Required Single-Bus Expansion Unit Configuration When Connected to a RAID Array

Based on the configuration in Figure 4-12, the default drive IDs for a 12-drive single-bus configuration are shown in Figure 4-13 and Figure 4-14. (ID6 and ID7 are reserved for host HBAs and should not be used as host channel IDs.)

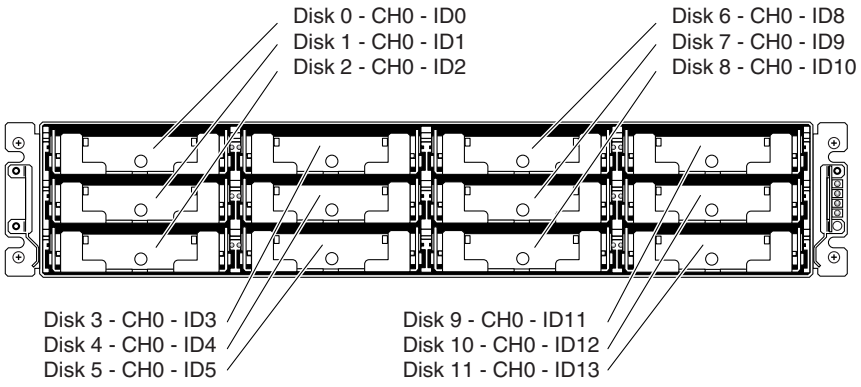

Figure 4-13 RAID Array: Single-Bus Configuration, Default IDs

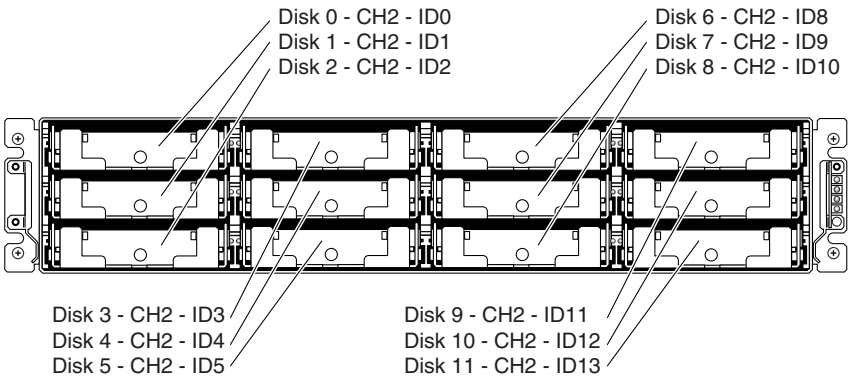

Figure 4-14 Expansion Unit: Single-Bus Configuration, Default IDs

The IDs are also displayed on the lower inside-front edge of the chassis. These IDs are automatically assigned and appear in RAID controller status tables.

4. Connect your RAID array (SCSI channel 1 and 3 ports) to one or two host servers with SCSI cables.

   SCSI ports for channels 1 and 3 are assigned as host channels by default.

4.8 Connecting Cables for a Split-Bus Configuration

A split-bus configuration assigns half the disk drives to one channel and the other to the second channel. This configuration can be helpful when you want to use one set of drives to mirror the second set with drives configured as RAID 1 drives.

1. To create a split-bus configuration on a RAID array, use the SCSI jumper cable to connect the CH 2 port to the split-bus (formerly known as the dual-bus) CONF port. Tighten the cable jack screws with six full clockwise turns to ensure proper connection and operation.

   Six IDs are assigned to CH 0, and six IDs are assigned to CH 2 in a 12-drive array.

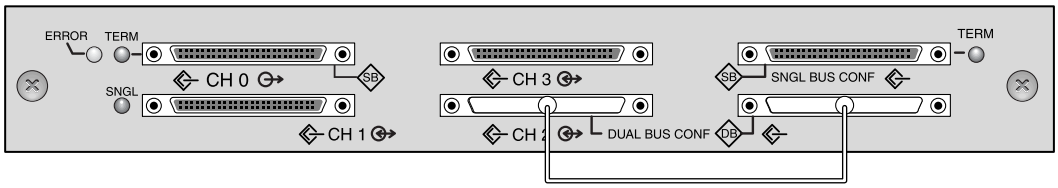

Figure 4-15 RAID Split-Bus Configuration

In the split-bus expansion unit configuration, no jumper cable is required.

Figure 4-16 Expansion Unit Split-Bus Configuration

2. (Optional) Use a SCSI cable to connect a RAID array (channel 2 port) to an expansion unit lower input port. Tighten the cable jack screws with six full clockwise turns to ensure proper connection and operation.

   In Figure 4-17, RAID channels 0 and 2 are expanded into the expansion unit, in a split-bus configuration set up on the RAID array and kept by default for the expansion unit.

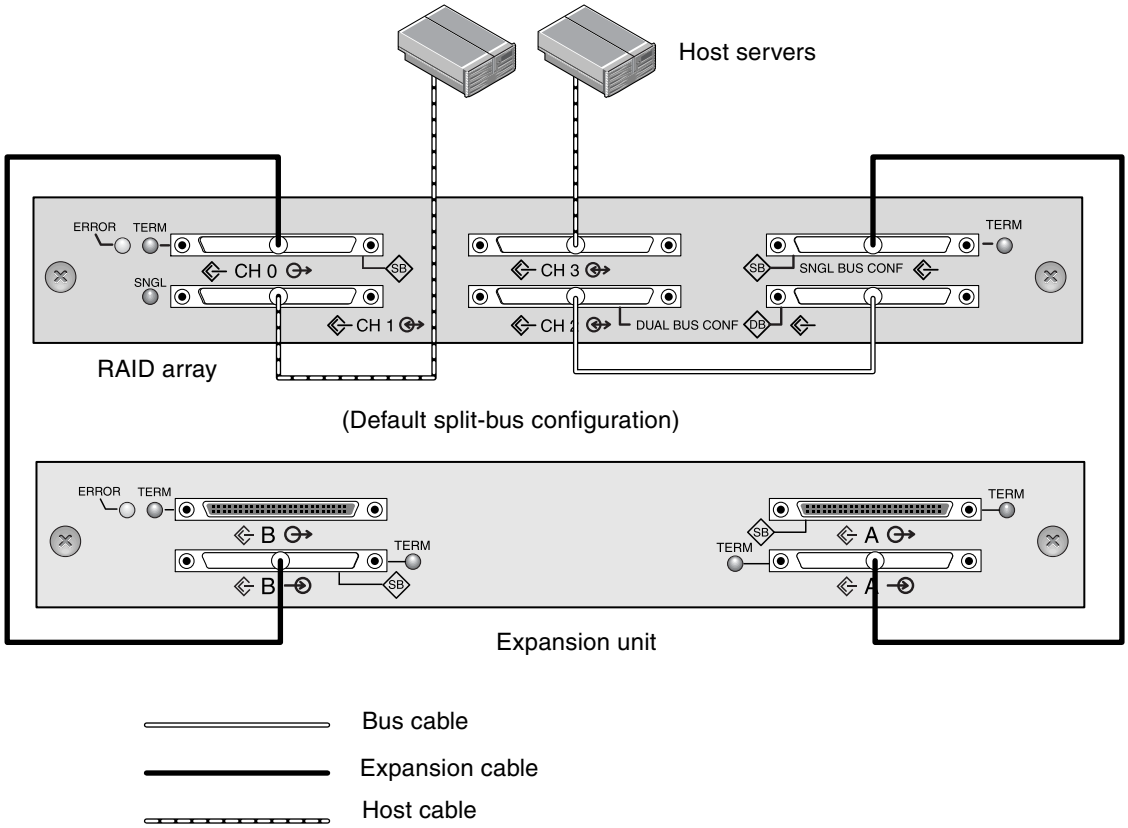

Figure 4-17 Split-Bus Configuration With One RAID Array and One Expansion Unit

Caution – A maximum of 16 drive IDs is allowed per channel. Therefore, with a 12-drive array, do not connect a split-bus channel 0 or channel 2 (6 IDs) to a single-bus expansion unit (12 IDs).

The split-bus configuration shown in the preceding figure assigns half the IDs from the RAID and the expansion unit to channel 0, and the other half to channel 2. The "SINGLE-BUS CONF" port is a channel 2 expansion port in a split-bus configuration.

3. Based on the configuration shown in Figure 4-17, the default drive IDs for a split-bus configuration are shown in the following figures.

   ID6 and ID7 are reserved and are not available for drive IDs.

   The IDs are also displayed on the lower inside edge of the chassis. These IDs are automatically assigned and appear in RAID controller status tables.

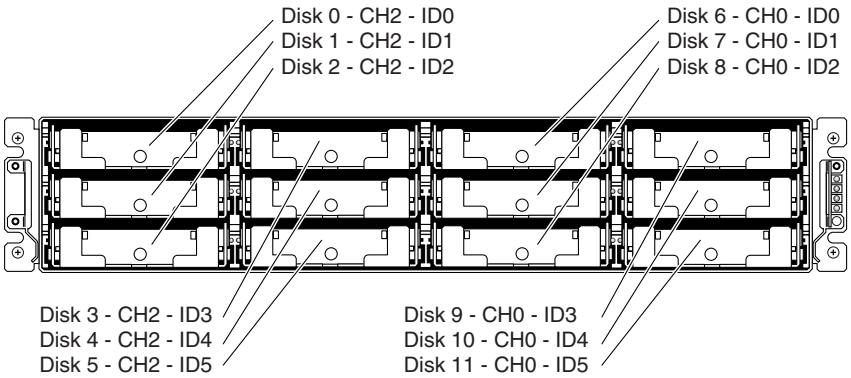

Figure 4-18 RAID Array: Split-Bus Configuration, Default IDs

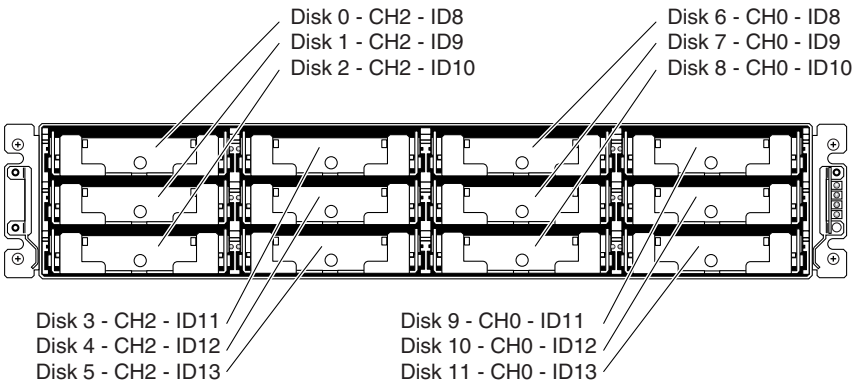

Figure 4-19 Expansion Unit: Split-Bus Configuration, Default IDs

4. Connect your RAID array (SCSI channel 1 and 3 ports) to two host servers with SCSI cables.

   SCSI ports for channels 1 and 3 are assigned as host channels by default.

4.8.1 Standard Cabling Scenarios

The following figures illustrate the standard cabling scenarios for a 12-drive array:

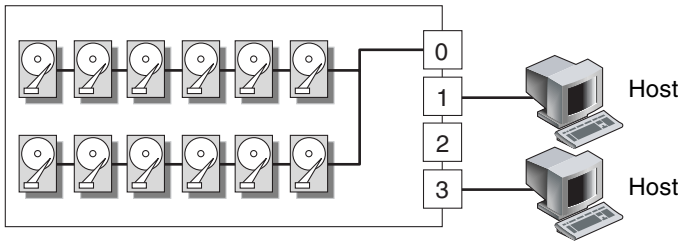

Figure 4-20 Configuration #1: Single-Bus Configuration With Two Hosts

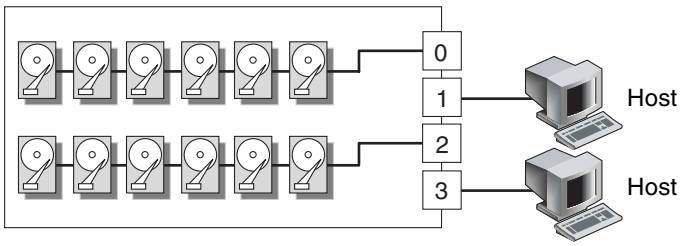

Figure 4-21 Configuration #2: Split-Bus Configuration With Two Hosts

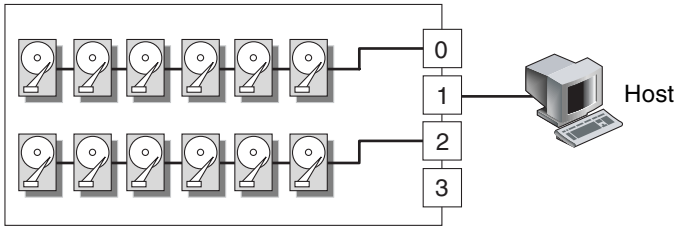

Figure 4-22 Configuration #3: Split-Bus Configuration With One Host

Caution – A maximum of 16 drive IDs is allowed per channel. Therefore, *do not* connect a split-bus channel 0 or channel 2 (6 IDs) to a single-bus expansion unit (12 IDs).

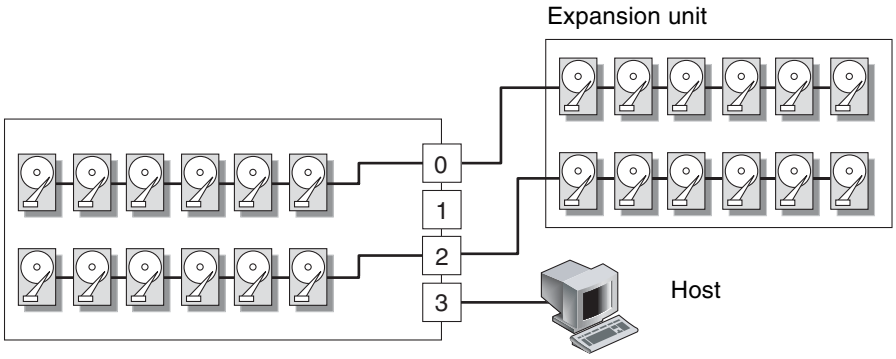

Figure 4-23 Configuration #4: Split-Bus Configuration With One Split-Bus Expansion Unit

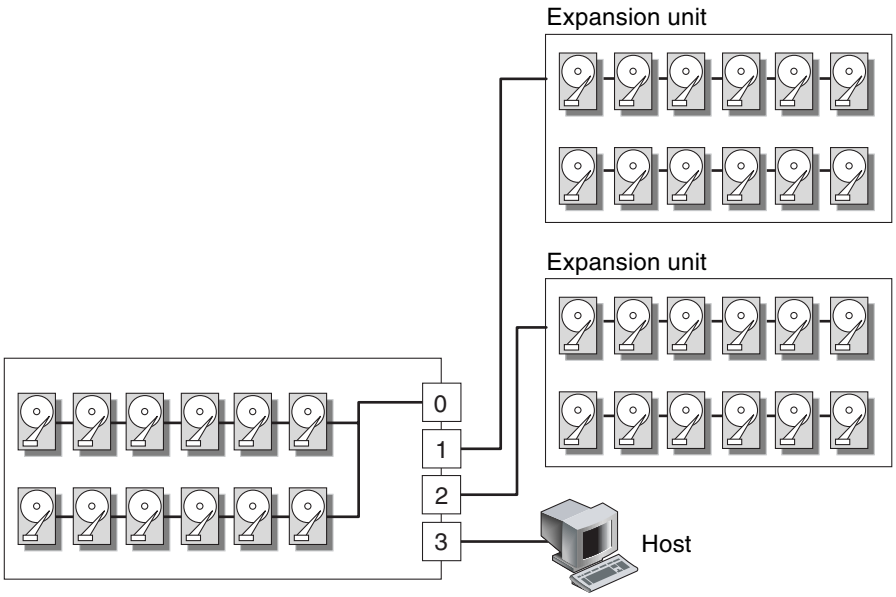

Figure 4-24 Configuration #5: Single-Bus Configuration With Two Single-Bus Expansion Units

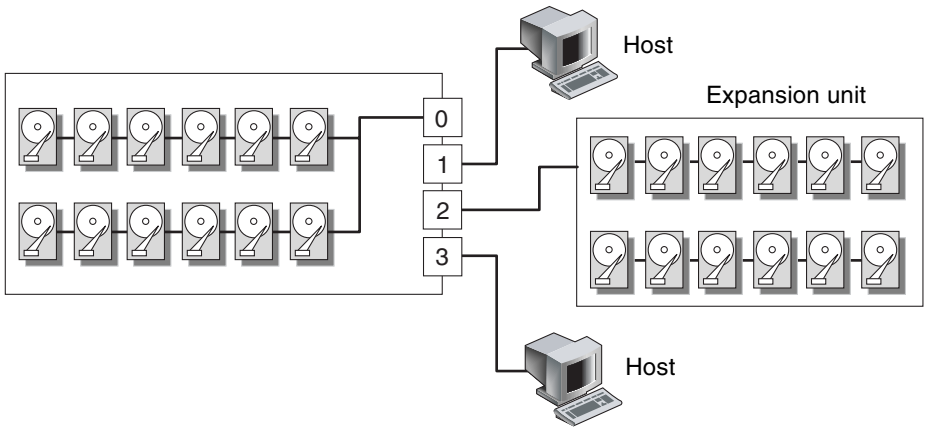

Figure 4-25 Configuration #6: Single-Bus RAID Connected to One Single-Bus Expansion Unit

4.9 Connecting Ports to Hosts

By default, channels 1 and 3 (the upper middle SCSI port and lower left SCSI port on the I/O module) are host channels. The array can be connected to a host in one of the following ways:

- By means of an Ultra320 LVD-compliant HBA installed in a host
- By means of a qualified and supported onboard single-ended server-embedded SCSI controller

Connect the array to one or two hosts with SCSI cables. Refer to the *SANnet II U320 SCSI Array Release Notes* for a list of the supported cables.

4.9.1 Connecting a SANnet II U320 SCSI RAID Array

The SCSI specification states that the maximum bus length for Ultra3 SCSI is 25 meters (82 feet) for point-to-point connections. The SANnet II U320 RAID array uses a point-to-point implementation. Each channel connector is on a separate physical SCSI bus.

Taking into account the internal bus length of .5 meters (1.64 feet) and the internal SCSI bus length of the host, the maximum SCSI cable length to each channel connector could conceivably be around 24 meters (72.8 feet) when connected to an Ultra3 host adapter. However, the longest Ultra3 cable qualified by Dot Hill is 10 meters (32.8 feet) in length.

When connected to single-ended host adapters, the longest support bus length per connector is 1.5 meters (4.9 feet).

Note – When connecting to Ultra3 host adapters, all SCSI cables must be Ultra3-qualified.

Note – If you connect two hosts to the same channel on a RAID array, you do not need to change the scsi-initiator-id of one host adapter.

4.9.2 Connecting a SANnet II U320 SCSI JBOD Array

The SCSI specification states that the maximum bus length for Ultra3 SCSI is 12 meters (39.4 feet) for multidrop connections. The SANnet II U320 SCSI JBOD arrays use a multidrop implementation. The ports on each channel are connected to the same physical SCSI bus.

Taking into account the internal bus length of .5 meters (1.6 feet), and the internal SCSI bus length of the host, the maximum SCSI bus length for each channel is 12 meters (39.4 feet) when connected to an LVD host adapter.

You must ensure that the length of all cables to any connected nodes, as well as the internal bus length of .5 meters (1.6 feet) internal to the SANnet II U320 SCSI JBOD array and the internal bus length of the host, is less than 12 meters (39.4 feet) in total. Also include the jumper cable length of .3 meters (.98 feet) if the JBOD is being used in a single-bus configuration.

The longest Ultra3 cable qualified by Dot Hill is 10 meters (32.8 feet) in length.

When connected to single-ended host adapters, the longest supported bus length per channel is 1.5 meters (4.9 feet).

Note – If you connect two hosts to the same channel, you must change the scsi-initiator-id of one host adapter as described in the host adapter documentation. When either of these hosts is subsequently booted, SCSI reset warnings are displayed on the other host.

4.10 Cabling to Expansion Units

Designed for a fully redundant configuration, a standard RAID array has channels 0 and 2 assigned as drive channels, and channels 1 and 3 assigned as host channels.

You can attach up to two expansion units to a RAID array if channel 1 or channel 3 is configured as a drive channel. When you configure a host channel as a drive channel, the primary ID (PID) is set to 8 and the secondary ID (SID) is set to 9. To avoid SCSI

ID conflicts, change the newly assigned drive channel PID to 6 and the SID to 7 using the firmware application. For details, refer to the *SANnet II Family RAID Firmware User's Guide*.

This section describes:

- "Cabling to One Expansion Unit" on page 4-21
- "Cabling to Two Expansion Units" on page 4-23
- "Adding an Expansion Unit to an Existing RAID Array" on page 4-25

4.10.1 Cabling to One Expansion Unit

The following figures are examples of configurations that have a RAID array connected to one expansion unit.

Caution – A maximum of 16 drive IDs is allowed per channel. Therefore, in a 12-drive array, do not connect a split-bus channel 0 or channel 2 (6 IDs) to a single-bus expansion unit (12 IDs).

In Figure 4-26, the RAID array and one expansion unit have been set up for single-bus configuration; Channel 2, a drive channel, is connected to the expansion unit.

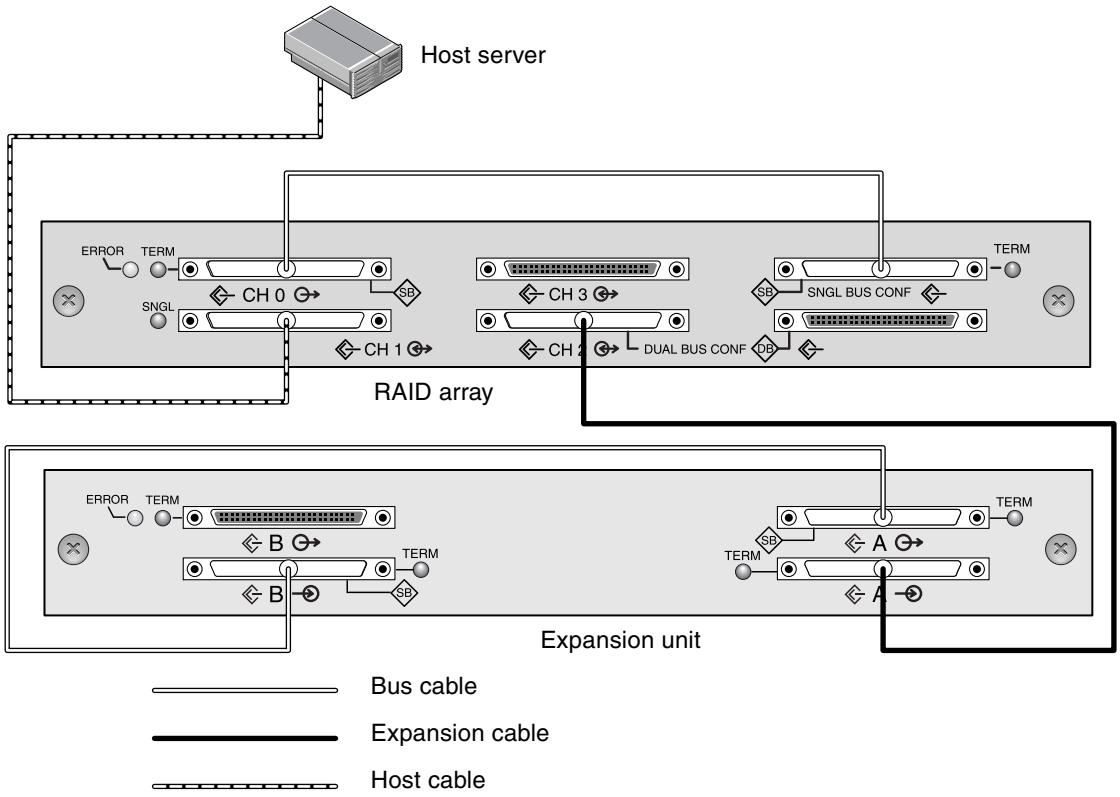

Figure 4-26 Single-Bus Configuration With One Host and One Expansion Unit

In Figure 4-27, the RAID array and one expansion unit have been set up for a split-bus configuration; Channel 0, a drive channel, is connected to the expansion unit and Channel 2, a drive channel, is connected to the RAID unit.

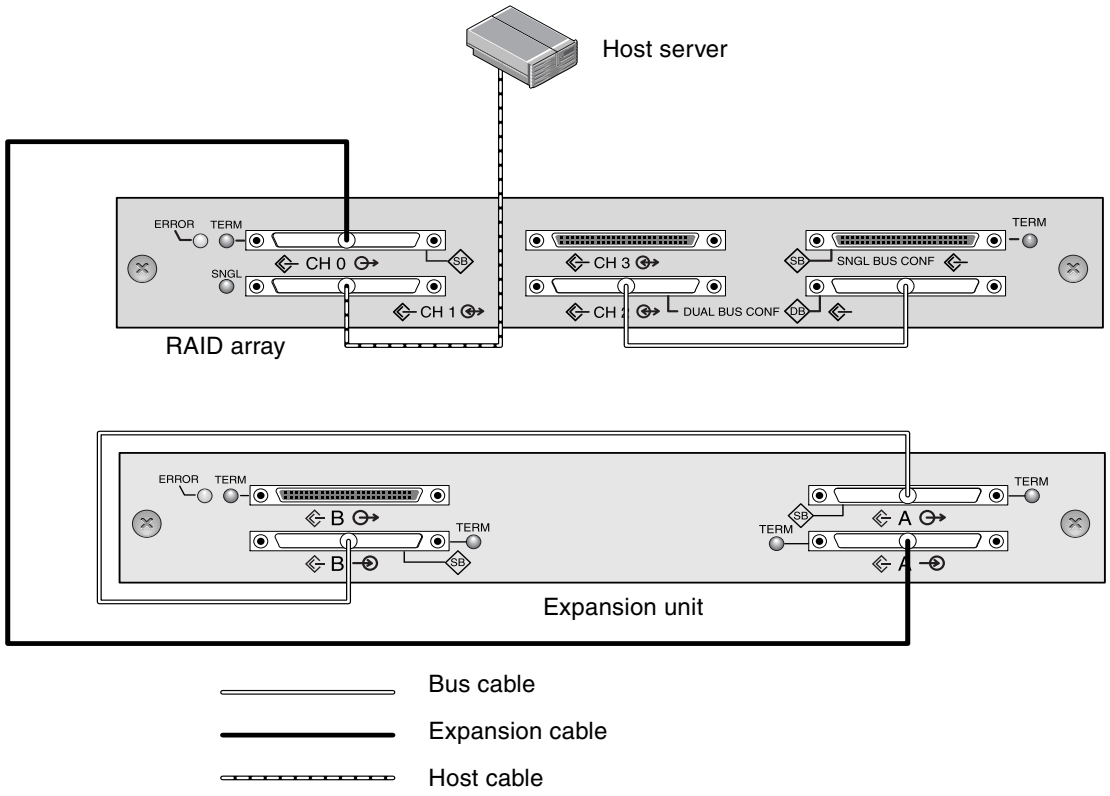

Figure 4-27 Split-Bus Configuration With One Host and One Expansion Unit

4.10.2 Cabling to Two Expansion Units

The following figures are examples of configurations that have a RAID array connected to two expansion units.

Caution – A maximum of 16 drive IDs is allowed per channel. Therefore, in a 12-drive array, do not connect a split-bus channel 0 or channel 2 (6 IDs) to a single-bus expansion unit (12 IDs).

Note – When you configure a host channel as a drive channel, the primary ID (PID) is set to 8 and the secondary ID (SID) is set to 9. To avoid SCSI ID conflicts, change the newly assigned drive channel PID to 6 and the SID to 7 using the firmware application. For details, refer to the *SANnet II Family RAID Firmware User's Guide*.

In Figure 4-28, the RAID array and the two expansion units have been set up for single-bus configuration; Channel 3 has been reassigned as a drive channel and connected to the second expansion unit.

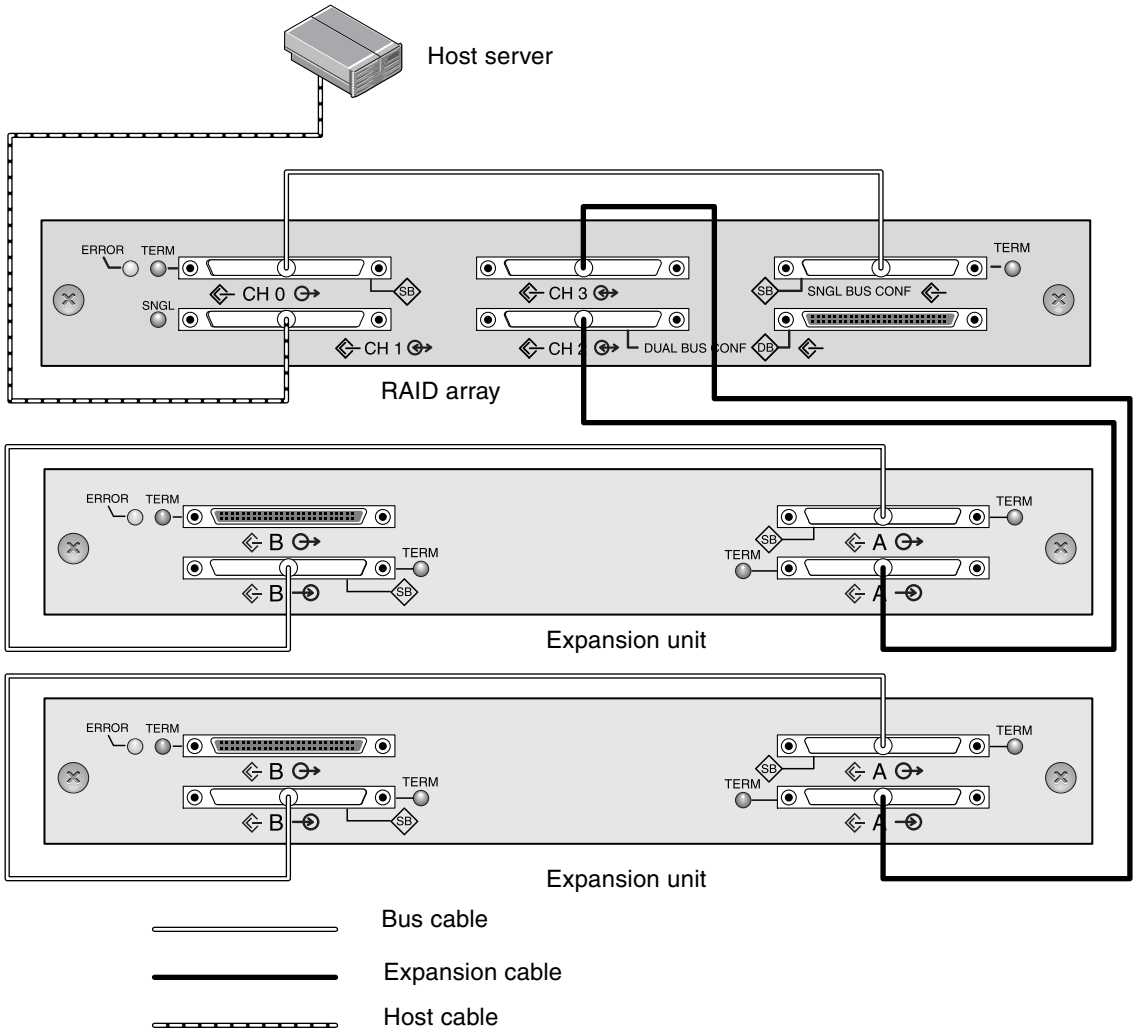

Figure 4-28 Single-Bus Configuration With One Host and Two Expansion Units

In Figure 4-29, the RAID array and one expansion unit #1 have been configured for split-bus configuration and expansion unit #2 is set for single-bus configuration; Channel 3 has been reassigned as a drive channel and connected to the second expansion unit. The RAID channels 0 and 2 are connected and expanded into the split-bus expansion unit #1, and RAID channel 3 is connected and expanded into a single-bus expansion unit #2.

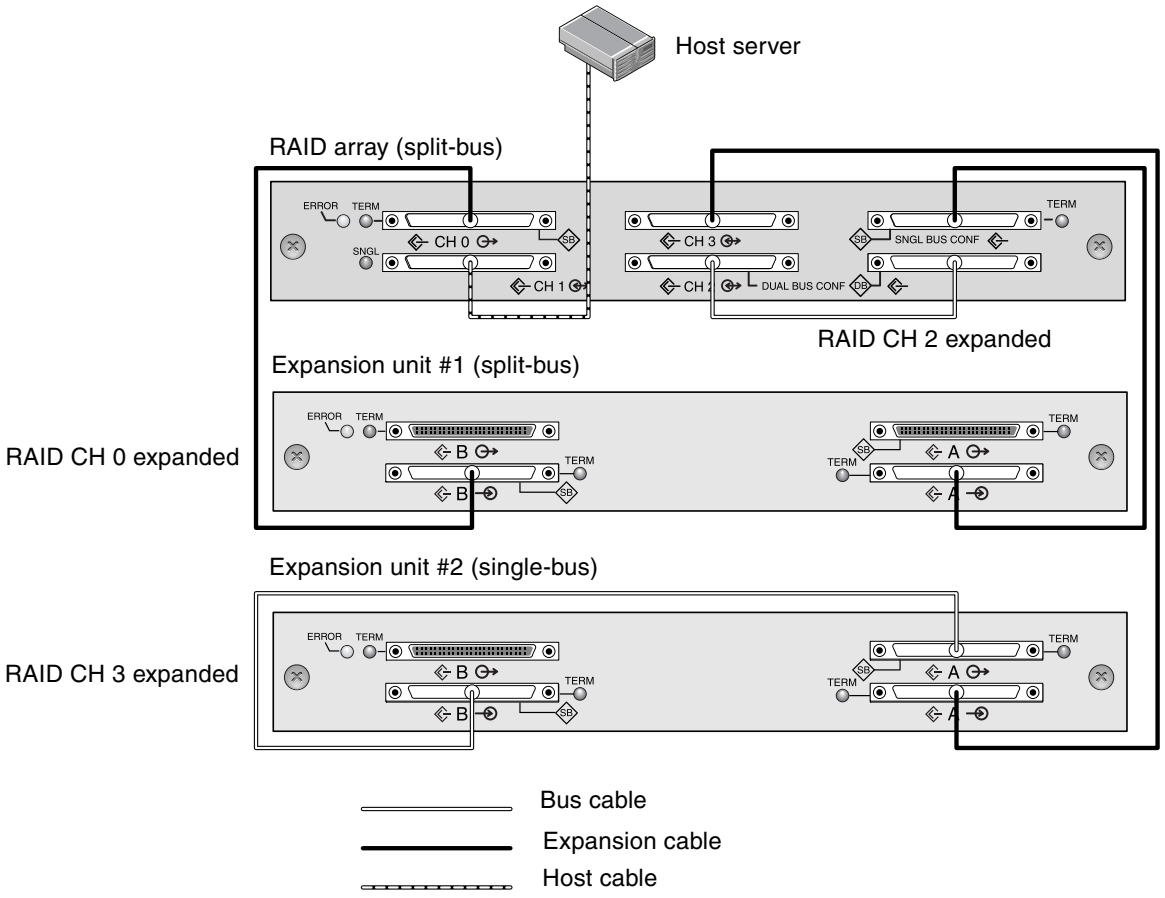

Figure 4-29 Split-Bus/Single-Bus Configuration With One Host and Two Expansion Units

4.10.3 Adding an Expansion Unit to an Existing RAID Array

To install an expansion unit to an existing, configured RAID array, perform the following steps:

1. Stop I/O and shutdown the controller to ensure that all data in the cache is written to disk.

   For details on shutting down, see "Power-Off Procedure" on page 4-32.

2. Physically cable the new expansion unit to the array using a valid cabling configuration.

   See "Cabling to One Expansion Unit" on page 4-21 and "Cabling to Two Expansion Units" on page 4-23 for more information on expansion unit cabling configurations.

3. Power on the expansion units.

   For details on the power on sequence, see "Power-On Sequence" on page 4-32.

4. Power on the RAID array.

Note – You can attach up to two expansion units to a RAID array if channel 1 or channel 3 is configured as a drive channel. When you configure a host channel as a drive channel, the primary ID (PID) is set to 8 and the secondary ID (SID) is set to 9. To avoid SCSI ID conflicts, change the newly assigned drive channel PID to 6 and the SID to 7 using the firmware application. For details, refer to the *SANnet II Family RAID Firmware User's Guide*.

4.11 Establishing Communications With An Array

Before you can configure an array, you must establish one or more communication links between at least one host and an array. You can use any combination of the array's RS-232 COM (serial) port, the Ethernet port, and the in-band data connection between the host and the array.

- A direct RS-232 COM port connection guarantees that a host can communicate with a RAID array even if the array's IP address changes or is unknown, or if the TCP/IP network suffers a temporary outage.

  See "Configuring the RS-232 Serial Port Connection" on page 4-28 for more information. For pinout information, see Appendix C.

  When you connect via the serial port, you immediately access the controller firmware application, a management program embedded in the firmware.

- SANnet II Family arrays ship with the Dynamic Host Configuration Protocol (DHCP) TCP/IP network support protocol enabled. If your network uses a DHCP server to automatically allocate IP addresses to attached devices, as soon as the RAID array is powered up, an IP address is assigned to it.

  You can use this IP address to monitor and manage the array's firmware through telnet sessions. See "Setting Up Out-of-Band Management Over Ethernet" on page 4-30 for information about setting up a telnet session.

  The out-of-band management tools are:

  - The host-based SANscape software.
  - The host-based SANscape Command-Line Interface (CLI).
  - The firmware application you access when you use the telnet command to connect to the IP address of the controller.

Note – By default, the CLI and the SANscape console automatically access in-band all arrays connected to the host server where the software is installed.

- A static IP address enables you to use telnet or other out-of-band management sessions to manage the array with no risk of a DHCP server changing its IP address. See "Manually Setting a Static IP Address" on page 4-29 for information.

4.11.1 Determining the Default IP Address

When the array is first powered up, the default IP address setting uses the IP address assigned by a DHCP server.

Note – If you do not use a DHCP server with the array, you will not have an IP address and will need to use the serial port connection to create an IP address. See "Configuring the RS-232 Serial Port Connection" on page 4-28.

If the RAID array is connected to a network with an active DHCP server, you can determine the IP address assigned to the array in several ways:

- Access the firmware and follow the procedure "Configuring the RS-232 Serial Port Connection" on page 4-28.

  When you connect via the serial port, you immediately access the controller firmware application, a management program embedded in the firmware.

- If you already installed the SANscape CLI program, use the **`show network-parameters`** CLI command.

  If the RAID controller is not on a network connected to an active DHCP server, an IP address of 0.0.0.0 is displayed. Refer to the *SANscape CLI User's Guide* for more information.

- If you already installed the SANscape program, use the Change Network Settings window to display the IP address of the array. Refer to the "Updating the Configuration" chapter in the *SANscape User's Guide* for more information.

  Event messages sent as SNMP traps to the email address you specify also contain the IP address of the array from which they are sent. Refer to the "Configuration Parameters" chapter in the *SANnet II Family RAID Firmware User's Guide* for more information.

Once you have determined the RAID controller's IP address using one of these methods, you can establish a telnet session to that IP address.

Caution – Because of the dynamic nature of DHCP-assigned IP addresses, the RAID array's IP address might change in the event of a controller reset, a network outage, or if the DHCP server is rebooted. If this happens, telnet sessions to the previous IP address can no longer communicate with the array, and it is necessary to use one of the methods described above to determine the new IP address.

If you do not have an active DHCP server on the same network as the RAID array, or if you prefer to have a static IP address, use the procedures in "Manually Setting a Static IP Address" on page 4-29.

4.11.2 Configuring the RS-232 Serial Port Connection

The RS-232 COM (serial) port on either controller module can be used to configure and monitor the RAID array using the controller firmware. It can be connected to a VT100 terminal, terminal emulation program, terminal server, or the serial port of a server.

1. Use a null modem serial cable to connect the COM port of the RAID array to the serial port on a host workstation.

   A null modem serial cable is included in your package.

2. Set the serial port parameters on the workstation as follows:
   - 38,400 baud
   - 8 bit
   - 1 stop bit
   - No parity

   If you need information on how to set up a Solaris **`tip`** session, see "Accessing the Firmware Application On a Solaris Host" on page D-1. For information on how to set serial port parameters on other servers, see:
   - Appendix E for Windows 2003 server or Windows 2000 advanced server.
   - Appendix F for a Linux server.
   - Appendix G for an IBM server running the AIX OS.
   - Appendix H for an HP server running the HP-UX OS.

3. Access the array through the COM serial port and select the VT100 terminal emulation to access the Main Menu.

4. Check the DHCP IP address and confirm that it is valid.

   From the firmware Main Menu choose **Configuration Parameters → Communication Parameters → Internet Protocol (TCP/IP)**.

   If the RAID controller is not on a network connected to an active DHCP server, "DHCP Client" is displayed rather than a DHCP-assigned IP address. Refer to the "Configuration Parameters" chapter in the *SANnet II Family RAID Firmware 4.1x User's Guide* for more information.

5. If you need to reset the IP address or make a fixed IP address, refer to "Manually Setting a Static IP Address" on page 4-29.

6. Configure the array.
   - To configure the array through the firmware application, refer to the *SANnet II Family RAID Firmware 4.1x User's Guide*.
   - To configure the array through out-of-band management, refer to "Setting Up Out-of-Band Management Over Ethernet" on page 4-30.

4.11.3 Manually Setting a Static IP Address

You can manually set an array's IP address using the controller's firmware by typing values for the IP address, the subnet mask, and IP address of the gateway. If your network uses a Reverse Address Resolution Protocol (RARP) server or a Dynamic Host Configuration Protocol (DHCP) server to automatically configure IP information for devices on the network, you can specify the appropriate protocol instead of typing the information manually.

Note – If you assign an IP address to an array to manage it out-of-band, for security reasons consider using an IP address on a private network rather than a publicly routable network. Using the controller firmware to set a password for the controller limits unauthorized access to the array. Changing the firmware's Network Protocol Support settings can provide further security by disabling the ability to remotely connect to the array using individual protocols such as HTTP, HTTPS, telnet, FTP, and SSH. Refer to the "Communication Parameters" section of the *SANnet II Family RAID Firmware User's Guide* for more information.

To set the IP address, subnet mask, and gateway address of the RAID controller, perform the following steps:

1. Access the array through the RS-232 COM port on the I/O controller module or through a telnet session to the existing IP address.
2. From the controller firmware's Main Menu, choose **view and edit Configuration parameters → Communication Parameters → Internet Protocol (TCP/IP)**.
3. Select the chip hardware address and MAC address that is displayed.
4. Choose **Set IP Address → Address**.
5. Type the desired IP address, subnet mask (if it is not automatically supplied), and gateway address, choosing each menu option in turn, backspacing over any existing entries.

   If your network sets IP addresses using a RARP server and you prefer using it to using a fixed IP address, type **`RARP`** rather than an IP address and do not type a subnet mask or gateway address. If your network sets IP addresses using a DHCP server and you prefer using it to using a fixed IP address, type **`DHCP`** rather than an IP address and do not type a subnet mask or gateway address.
6. Press **Esc** to continue.

   A confirmation prompt is displayed.

```
Change/Set IP Address ?
```

7. Click **Yes** to continue.

Note – You must reset the controller for the configuration to take effect.

You are prompted to reset the controller.

8. Click **Yes** to reset the controller.

   The controller takes a few minutes to reset.

4.12 Setting Up Out-of-Band Management Over Ethernet

The controller Ethernet port offers interactive out-of-band management through several interfaces:

- The host-based **SANscape** application.
  Refer to the *SANscape User's Guide* for details.
- The host-based **SANscape Command-Line Interface (CLI)**.
  Refer to the *SANscape CLI User's Guide* for details.
- The **firmware application** you access when you use the **`telnet`** command to connect to the IP address of the controller.

Note – A login password can be set from the firmware application or the CLI.

Using an Ethernet connection, you can configure and monitor RAID arrays and expansion units remotely by using the **`telnet`** command to access the firmware application on the array and by using the SANscape or SANscape CLI software.

Note – If you assign an IP address to an array to manage it out-of-band, for security reasons consider using an IP address on a private network rather than a publicly routable network. Using the controller firmware to set a password for the controller limits unauthorized access to the array. Changing the firmware's Network Protocol Support settings can provide further security by disabling the ability to remotely connect to the array using individual protocols such as HTTP, HTTPS, telnet, FTP, and SSH. Refer to the "Communication Parameters" section of the *SANnet II Family RAID Firmware User's Guide* for more information.

---

1. To access the RAID array over an Ethernet connection, first connect the RAID array's Ethernet port on each controller to the network.

Note – SANnet II family arrays require at least CAT-5 Ethernet cable.

Note – In a dual-controller RAID array, be sure to connect both Ethernet ports to the network. This provides failover if one controller fails.

2. Establish the IP address of the RAID array, as described in "Establishing Communications With An Array" on page 4-26.
3. To use the firmware application program from the host server, connect to the IP address of the RAID array controller with the following command:

```
# telnet IP-address
```

Note – Alternatively, you can use the Solaris operating system **`tip`** command or a terminal emulation program to access the firmware application program. See "Configuring the RS-232 Serial Port Connection" on page 4-28 for more information.

4. Press **Ctrl-L** to refresh the screen and view the Main Menu.

Note – If you reset the controller during a **`telnet`** session, you are disconnected from the RAID array. Use the **`telnet`** command to login to the array again.

To connect the SANscape program (on a host server) to a RAID array that has an IP address, refer to the out-of-band management instructions in the *SANscape User's Guide.*

The same document's "Email and SNMP" appendix provides information about configuring SANscape software to use Simple Network Management Protocol (SNMP) traps and Management Information Bases (MIBs) to provide information to other out-of-band enterprise management software. The "Monitoring the Array" chapter explains the use of SANscape agents to redirect event messages into host system logs.

You can also enable the controller firmware to send event messages using SNMP. Refer to the "Configuration Parameters" chapter in the *SANnet II Family RAID Firmware User's Guide* for more information.

4.13 Remaining Steps

SANnet II U320 SCSI arrays are preconfigured with a single RAID 0 logical drive mapped to LUN 0, and no spare drives. This is not a usable configuration, but it enables in-band connections with management software. You must delete this logical drive and create new logical drives.

All configuration procedures can be performed by using the COM port. You can also perform all procedures except the assignment of an IP address through an Ethernet port connection to a management console.

Some of the cabling configurations require accessing the firmware application to further configure the array. For example, the single-bus array with one host and two expansion units (see Figure 4-28) configuration requires changing one of the channels from a host to a drive channel. In order to do this, you must change the drive channel using the firmware application. For details about drive channels as well as other configuration commands that need to be performed, refer to the *SANnet II Family RAID Firmware User's Guide*.

4.14 Power-On Sequence

Power on the equipment in the following order so the host computer discovers all connected arrays:

a. Expansion units

b. RAID array

c. Host computers

If an array is connected to a host using a serial port connection and powered on, the host terminal window displays a series of messages, as shown in the following example.

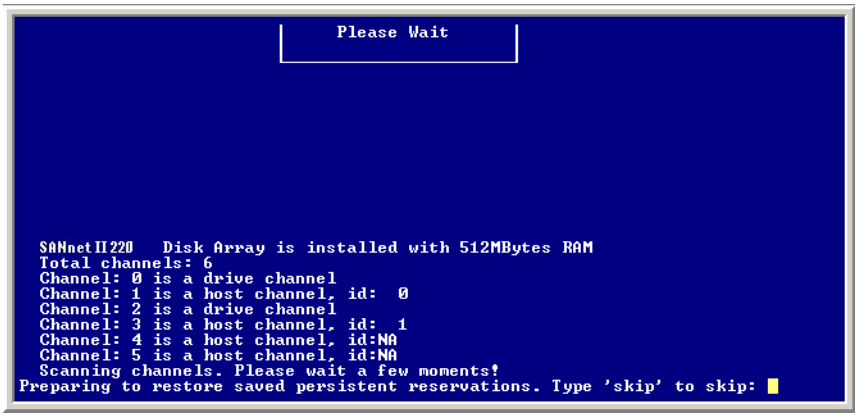

Figure 4-30 Host Terminal Window

Do not use the **`skip`** option shown at the bottom of the example. This option is reserved for support personnel performing testing.

4.15 Power-Off Procedure

You might need to power off the array (both power supplies) if you relocate the array or perform certain maintenance procedures with associated servers. Always shut down the array's controller before powering off the array.

Caution – If controllers are not shut down from the firmware application or the CLI before an array is powered off, data that is written to cache and that has not been completely written to the disks will be lost.

To power off an array, perform the following steps:

1. Stop all I/O activity to the array.
2. Shut down the controller with one of the following commands:
   - Firmware application **Shutdown Controller** command (**system Functions → Shutdown controller**)
   - SANscape CLI **`shutdown controller`** command

   These commands first halt all I/O activity, and then write the contents of cache to the drives.
3. Power off both power supply/fan modules.

   See "Power-On Sequence" on page 4-32 for information about turning the array on again.

CHAPTER 5

Checking LEDs

This chapter describes the front-panel and back-panel LEDs, which display the operating status of all drives and modules. Topics covered in this chapter are:

- "LEDs When the Array Is First Powered On" on page 5-1
- "Front-Panel LEDs" on page 5-2
  - "Drive LED Status" on page 5-4
- "Back-Panel LEDs" on page 5-5
  - "I/O Module LEDs" on page 5-6
  - "RAID Controller LEDs" on page 5-7
  - "Power Supply and Fan Module LEDs" on page 5-7
  - "EMU Module LEDs" on page 5-9

5.1 LEDs When the Array Is First Powered On

With the array powered up, but not connected to a server, you should see the LED conditions described in Table 5-1 and Table 5-2.

Table 5-1 Front-Panel LED Status When Array Is First Powered On

Drive LEDs	Blinking green
Chassis ear LEDs	Solid green

Note – When a controller is powered on, continuous media scans begin on all physical drives that are active components of logical drives. Whenever media scan is running on a drive, its front-panel LED flashes green. It is normal for almost all front-panel drive LEDs to flash green unless media scanning is terminated. For more information, refer to the *SANnet II Family RAID Firmware User's Guide*.

Table 5-2 Back-Panel LED Status When Array Is First Powered On

I/O Module:	
ERROR LED	Blinking green (no bus configuration; invalid state)
TERM LED	Solid green (autotermination enabled)
SNGL LED	Inactive (no bus configuration; invalid state)
Controller Module:	
ACTIVITY LED	Inactive (controller not busy)
Center LED (status symbol)	Slow blinking green: good primary controller Solid green: good secondary controller
Right LED (battery symbol)	Blinking green if battery is charging Solid green if battery is fully charged
Ethernet port LEDs	Inactive
Power/fan module LEDs	Solid green
Event module LEDs	Solid green

5.2 Front-Panel LEDs

The drive LEDs are located between the rows of drives on the front panel (see the following figure). The system operation LEDs are located on the right ear of the chassis.

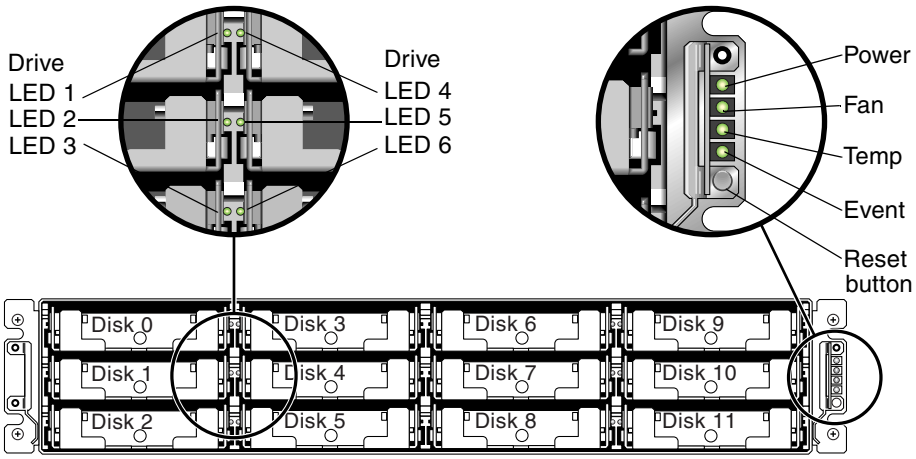

Figure 5-1 Front-Panel LEDs

The following figure shows the front-panel LEDs and the Reset button.

Use a paperclip to push the **Reset** button to silence a failed component alarm. See “Silencing Audible Alarms” on page 6-4 for more information about silencing audible alarms.

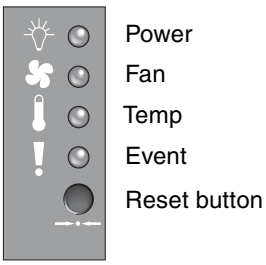

Figure 5-2 Chassis Ear LEDs and Reset Button on Front Panel

The following table lists the front-panel LEDs.

Table 5-3 Front-Panel LEDs

LED	LED Color	Description
Drive For more information, see Table 5-4.	Solid green Blinking green Solid amber	Good: Drive power-up and spin-up OK. Good: Drive activity. Failed: Drive failure.
Power (Light bulb icon) Monitors the DC output voltage within tolerance specification. Overcurrent protection shutting down any voltage output displayed. Voltage thresholds: +5 VDC +/–.25 VDC +12 VDC +/–.6 VDC Current thresholds: +5 VDC 35A +12 VDC 25A	Solid green Solid amber	Power supply good. Failed: One or more output voltages out of range.
Fan (Fan icon) Monitors the fan speed within nominal operational RPM specification of 5000 RPM.	Solid green Solid amber	Good: Both fans are rotating at over 900 RPM. Faulty: Failed: One or both fans are rotating at less than 900 RPM.
Temp (Thermometer icon) Monitors the temperature level and indicates overtemp status.	Solid green Solid amber	Good: Normal temperature. Failed: Temperature over threshold.
Event (Caution icon) Indicates any abnormal or failure event in the EMU.	Solid green Solid amber	Normal operation of EMUs. Abnormal event EMU.

For more information about temperature sensors, refer to the *SANnet II Family RAID Firmware User's Guide*.

Note – To test that the LEDs work, using a paperclip, press and hold the Reset button for 5 seconds. All the LEDs should change from green to amber when you perform this test. Any LED that fails to light indicates a problem with the LED. When you release the Reset button, the LEDs return to their initial state.

5.2.1 Drive LED Status

The drive LED color changes based on array events. For example, when a media scan is performed, to indicate an event is taking place, the drive LEDs blink green for the physical drives that compose the logical drive that is being scanned. The following table lists the events that influence the drive LED status.

Table 5-4 Drive LED Status

LED Status	Event	Description
Solid green	No error	A drive is working as expected.
Solid green	Unconfigured	A drive is not included in an array configuration. This condition excludes a drive that is currently part of an array, configured as a hot spare, or that failed while part of an array.
Solid green	Hot spare	A global or local spare is configured.
Solid green	Critical array	A logical drive or logical volume is in a critical state.
Solid green	Failed array	A logical drive or logical volume fails.
Solid green	Rebuild stopped	A logical drive rebuild is stopped, or media scan is stopped.
Blinking green	Parity check	A parity check is performed on a qualified logical drive.
Blinking green	Rebuilding	A logical drive is rebuilding.
Blinking green	Media scan	A logical drive is created, or the controller is reset, and the default media scan command, which automatically starts and runs continuously, has not been stopped, or the firmware application "Flash All Drives" option is used.
Blinking green	Drive activity	A drive is processing I/O.

Table 5-4 Drive LED Status *(Continued)*

LED Status	Event	Description
Amber	Predicted fault	**Single-bus configuration only.** The disk drives perform predictive failure (SMART) analysis, and encounter a predicted failure.
Amber	Drive fault	**Single-bus configuration only.** A drive fails.
Amber	Identify	The SANscape CLI **`set led`** command is run, or the firmware application, "Flash All Drives" option is used.

Note – When a controller is powered on or reset, or when a logical drive is created, continuous media scans begin on all physical drives that are active components of logical drives. Whenever media scan is running on a drive, its front-panel LED flashes green. It is normal for almost all front-panel drive LEDs to flash green unless media scanning is terminated. For more information, refer to the *SANnet II Family RAID Firmware User's Guide*.

5.3 Back-Panel LEDs

The back-panel LED colors indicate the conditions described in the following figures and tables. The following figure is the back panel with LEDs.

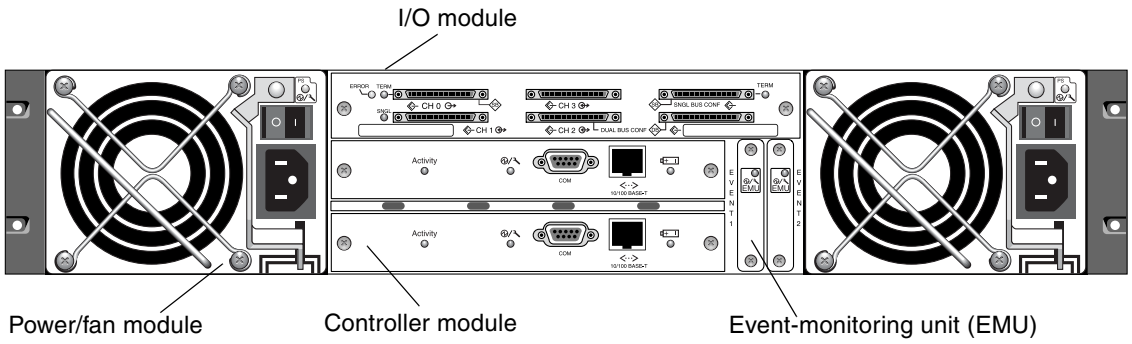

Figure 5-3 Back-Panel LEDs

If you see a blinking green or amber LED, you might have an incorrect configuration or a failed component.

Note – To test that the LEDs work, using a paperclip, press and hold the Reset button for 5 seconds. All the LEDs should change from green to amber when you perform this test. Any LED that fails to light indicates a problem with the LED. When you release the Reset button, the LEDs return to their initial state.

5.3.1 I/O Module LEDs

The following figures shows the SANnet II U320 SCSI array I/O module and the LEDs on its back panel for a RAID array and for an expansion unit.

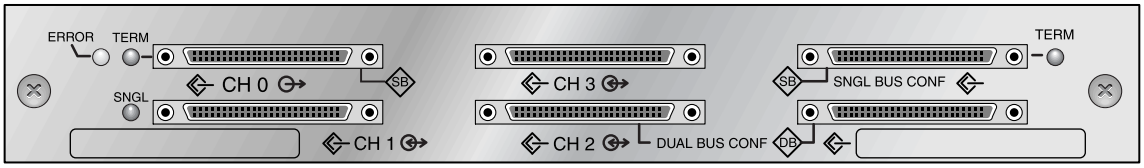

Figure 5-4 I/O Module for a RAID Array

The following figure illustrates the I/O module for the expansion unit.

Figure 5-5 I/O Module for an Expansion Unit

The following table lists the I/O module LEDs.

Table 5-5 I/O Module Back-Panel LEDs

Module	LED Color	Status
TERM LEDs	Solid green	Autotermination enabled.
	Inactive LED	Autotermination disabled.
ERROR LED	Blinking green	Invalid single- or split-bus configuration.
	Solid amber	Failed I/O module.
	Inactive LED	Valid single- or split-bus configuration, and I/O module is good.
SNGL LED (RAID only)	Solid green	Cabled for single-bus configuration or no configuration.
	Inactive LED	Cabled for split-bus configuration.

5.3.2 RAID Controller LEDs

The following figure shows the RAID controller LEDs on the back panel.

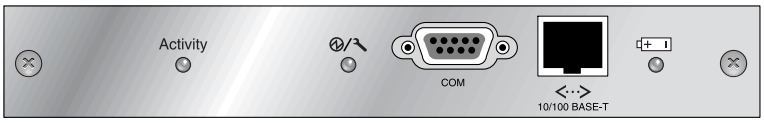

Figure 5-6 RAID Controller LEDs

The following table lists the RAID controller LEDs.

Table 5-6 RAID Controller LEDs

LED	Color	Status
Activity LED	LED inactive	Not active.
	Blinking green	Controller is busy.
	Solid green	Controller data is in cache.
	Solid amber	Power is lost and data is in memory.
Center LED (status symbol)	Slow-blinking green Solid green Solid amber	Good: primary controller. Good: secondary controller. Failed controller.
Right LED (battery symbol)	Blinking green Solid green Solid amber	Battery is charging. Battery is fully charged. Battery failed.
Ethernet 10/100 BASE-T LEDs (left and right corners of the connector)	Amber Blinking green	Ethernet link is connected and working. Ethernet link is transmitting or receiving data.

5.3.3 Power Supply and Fan Module LEDs

The AC and DC power supply and fan modules have a single LED.

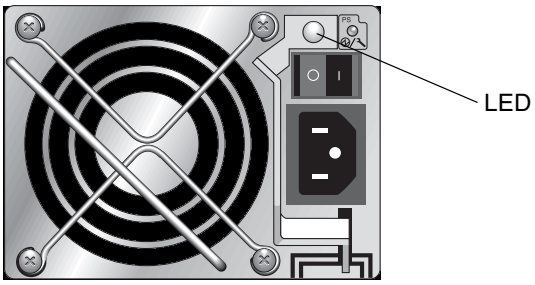

Figure 5-7 AC Power Supply and Fan Module

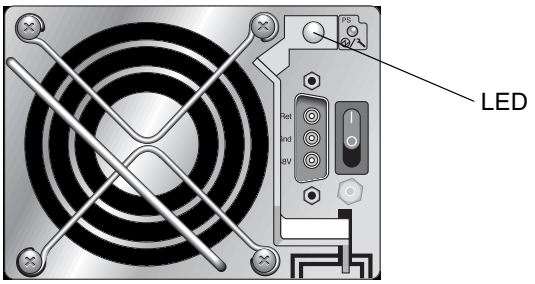

Figure 5-8 DC Power Supply and Fan Module

The following table lists the power supply and fan module LEDs.

Table 5-7 Power Supply and Fan Module Back-Panel LEDs

Module	LED Color	Status
Power supply/fan		
Monitors the DC output voltage within tolerance specification. Overcurrent protection shutting down any voltage output is also displayed. Voltage thresholds: +5 VDC +/–.25 VDC +12 VDC +/–.6 VDC Current Thresholds: +5 VDC 35A +12 VDC 25A	Solid green	Power supply good.
	Solid amber	Failed: one or more output voltages out of range.
	Solid green	Good fan: Both fans are rotating at over 900 RPM.
	Solid amber	Faulty/failed: One or both fans are rotating at less than 900 RPM.

5.3.4 EMU Module LEDs

The event-monitoring unit (EMU) module has a single LED.

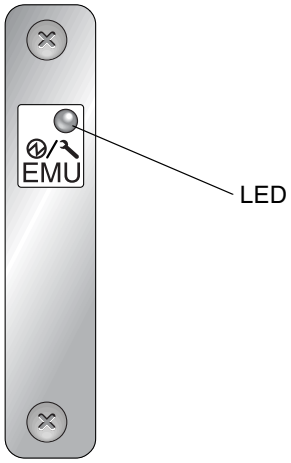

Figure 5-9 EMU Module

The following table lists the EMU module LEDs.

Table 5-8 EMU Module Back-Panel LEDs

Module	LED Color	Status
EMU module	Solid green	Good EMU module.
	Solid amber	Failed EMU module.

CHAPTER 6

Maintaining Your Array

This chapter covers the following maintenance topics:

- "Scanning Drives" on page 6-1
- "Using Optional Software to Monitor and Manage Your Array" on page 6-2
  - "Out-of-Band Connection" on page 6-2
  - "Inband Connection" on page 6-3
- "Battery Operation" on page 6-3
  - "Battery Status" on page 6-3
- "Silencing Audible Alarms" on page 6-4
- "Viewing Event Logs on the Screen" on page 6-6
- "Upgrading Firmware" on page 6-7
  - "Controller Firmware Upgrade Features" on page 6-7
  - "Installing Firmware Upgrades" on page 6-8
- "Replacing the Front Bezel and Ear Caps" on page 6-8
  - "Removing the Front Bezel and Ear Caps" on page 6-8
  - "Placing the Bezel and Ear Caps Back Onto the Chassis" on page 6-9

6.1 Scanning Drives

When a SCSI array is powered on, the controller scans all physical drives that are connected through drive channels. Unlike Fibre Channel and SATA arrays, if a SCSI array has completed initialization and then a physical drive is connected, the controller does not automatically recognize the new drive until the next controller reset. This difference in behavior is due to differences between Fibre Channel and SCSI architectures and protocols.

Use the **Scan scsi drive** firmware application menu option to force the controller to scan a drive that has been added to a SCSI array, or use the **`scan disk`** command to scan and make available a hard drive without having to shut down the array. For more information about the **`scan disk`** command, refer to the "Disk Commands" section of the *SANscape CLI User's Guide*.

Note – Neither the **Periodic Auto-Detect Failure Drive Swap Check Time** firmware application menu option nor the **Periodic Drive Check Time** menu option force the scanning of a SCSI drive.

6.2 Using Optional Software to Monitor and Manage Your Array

This section describes the optional software management tools available for monitoring and managing the SANnet II U320 SCSI array with inband connections.

Note – The SANscape CLI and the SANscape software can also be accessed through the Ethernet port for out-of-band management of the array. See "Setting Up Out-of-Band Management Over Ethernet" on page 4-30.

- **SANscape**. Provides centralized storage configuration, maintenance, and monitoring functions. Refer to the *SANscape User's Guide* for inband setup procedures.
- **SANscape Alert**. Provides event monitoring and notification. Refer to the *SANscape Alert User's Guide* for information.
- **SANscape Command-Line Interface (CLI)**. A command-line interface utility that provides script-based management. Refer to the *SANscape CLI User's Guide* for more information.

For details on how to install SANscape, SANscape Alert, or the SANscape CLI software, refer to the *SANscape Software Installation Guide.*

The optional SANscape CD for your array provides the related user guides, with detailed installation and configuration procedures for SANscape, SANscape Alert, and SANscape CLI.

6.2.1 Out-of-Band Connection

With the out-of-band serial port connection, you can use a Solaris **`tip`** session or a Microsoft Windows terminal emulation program to access the firmware application. For details about Microsoft Windows, see "Setting Up the Serial Port Connection" on page E-1.

With the out-of-band Ethernet port connection, you can use the **`telnet`** command to access the firmware application. For details, see "Setting Up Out-of-Band Management Over Ethernet" on page 4-30. You can also configure an array over the Ethernet connection with CLI or SANscape software.

6.2.2 Inband Connection

With inband host connections, you can use SANscape software or the command-line interface (CLI). Refer to the:

- *SANscape User's Guide* for the inband setup procedures
- *SANscape CLI User's Guide*
- *SANscape Software Installation Guide*. This guide provides installation instructions for all host-based software.

6.3 Battery Operation

The battery LED (on far right side of the controller module) is an amber LED if the battery is bad or missing. The LED is blinking green if the battery is charging and is solid green when the battery is fully charged.

6.3.1 Battery Status

The initial firmware screen displays the battery status at the top of the initial screen where BAT: status displays somewhere in the range from BAD to ----- (charging), or +++++ (fully charged).

For maximum life, lithium ion batteries are not recharged until the charge level is very low, indicated by a status of -----. Automatic recharging at this point takes very little time.

A battery module whose status shows one or more + signs can support cache memory for 72 hours. As long as one or more + signs are displayed, your battery is performing correctly.

Table 6-1 Battery Status Indicators

Battery Display	Description
-----	Discharged; the battery is automatically recharged when it reaches this state.
+----	Adequately charged to maintain cache memory for 72 hours or more in case of power loss. Automatic recharging occurs when the battery status drops below this level.
++---	Over 90% charged; adequate to maintain cache memory for 72 hours or more in case of power loss.

Table 6-1 Battery Status Indicators

Battery Display	Description
+++--	Over 90% charged; adequate to maintain cache memory for 72 hours or more in case of power loss.
++++-	Over 90% charged; adequate to maintain cache memory for 72 hours or more in case of power loss.
+++++	Fully charged; adequate to maintain cache memory for 72 hours or more in case of power loss.

Your lithium ion battery should be changed every two years if the unit is continuously operated at 77°F (25°C). If the unit is continuously operated at 95°F (35°C) or higher, it should be changed every year. The shelf life of your battery is three years.

Note – The RAID controller has a temperature sensor that shuts off battery charging above 129.2°F (54°C). When this happens, the battery status might be reported as BAD, but no alarm is written to the event log since no actual battery failure has occurred. This behavior is normal. As soon as the temperature returns to the normal range, battery charging resumes and the battery status is reported correctly. It is not necessary to replace or interfere with the battery in this situation.

For information on the date of manufacture and how to replace the battery module, refer to the *SANnet II Family FRU Installation Guide*.

For more information about the acceptable operating and non-operating temperature ranges for your array, see "Environmental Requirements" on page 2-3.

6.4 Silencing Audible Alarms

An audible alarm indicates that either a component in the array has failed or a specific controller event has occurred. Error conditions and controller events are reported by event messages and event logs. Component failures are also indicated by LED activity on the array.

Note – It is important to know the cause of the error condition because how you silence the alarm depends on the cause of the alarm.

To silence the alarm, perform the following steps:

1. Check the error messages, event logs, and LED activity to determine the cause of the alarm.

   Component event messages include but are not limited to the following terms:

   - Temperature
   - Cooling element

- Power supply
- Battery
- Fan
- Voltage sensor

Caution – Be careful to observe and rectify a temperature failure alarm. If you detect this alarm, shut down the controller and the server as well if it is actively performing I/O operations to the affected array. Otherwise, system damage and data loss can occur.

Controller event messages include but are not limited to the following terms:

- Controller
- Memory
- Parity
- Drive channel
- Logical drive

Refer to the "Event Messages" appendix in the *SANnet II Family RAID Firmware User's Guide* for more information about controller events.

2. Depending on whether the cause of the alarm is a failed component or a controller event and which application you are using, silence the alarm as specified in the following table.

Table 6-2 Silencing Alarms

Cause of Alarm	To Silence Alarm
Failed Component Alarms	Use a paper clip to push the **Reset** button on the right ear of the array.
Controller Event Alarms	**In the Firmware Application:** From the Main Menu, choose **system Functions → Mute beeper**. Refer to the *SANnet II Family RAID Firmware User's Guide* fore more information. **In SANscape:** Refer to "Updating the Configuration" in the *SANscape User's Guide* for information about the **Mute beeper** command. **In the SANscape CLI:** Run **`mute [controller].`** Refer to the *SANscape CLI User's Guide* for more information.

Note – Pushing the Reset button has no effect on controller event alarms and muting the beeper has no effect on failed component alarms.

6.5 Viewing Event Logs on the Screen

A controller event log records an event or alarm that occurs after the system is powered on. The controller event log records up to 200 events that occur after the system is powered on. The event log records configuration and operation events and error messages. The event log also shows alarm events reported by the event monitoring units in each RAID unit and expansion unit. The status of battery backup units, fans, temperatures, and voltages are sometimes recorded as well.

For each event, a <P> or <S> on the right side of the screen indicates whether the primary or secondary controller in a dual-controller configuration issued the event message.

Caution – Powering off or resetting the controller automatically deletes all recorded event logs.

1. Choose **view and edit Event logs** on the Main Menu.

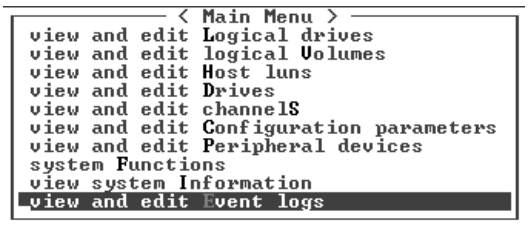

   A log of recent events is displayed.

Table 6-3 Example Event Logs

Controller Initialization Completed
LG:0 Logical Drive NOTICE: Starting On-Line Initialization
On-Line Initialization of Logical Drive 0 Completed
LG:1 NOTICE: CHL:2 ID:3 Starting Media Scan
LG:1 ALERT: CHL:2 ID:0 Media Scan Aborted

Note – The controller can store up to 200 event logs. An event log can record a configuration or operation event as well as an error message, notification, or alarm event.

2. Use your arrow keys to move up and down through the list.
3. To clear the events from the log once you have read them, use your arrow keys to move down to the last event you want to clear and press **Return**.

   A **Clear Above xx Event Logs**? confirmation message is displayed.

4. Click **Yes** to clear the recorded event logs.

Note – Resetting the controller clears the recorded event logs. To retain event logs after controller resets, you can install and use the SANscape program or the SANscape CLI.

6.6 Upgrading Firmware

From time to time, firmware upgrades are made available. You can download upgrades from the Dot Hill Software Downloads web page, which is located at http://www.dothill.com/support/downloads.htm. Before you download the new firmware, you must fill out a short questionaire. Each upgrade applies to one or more particular pieces of firmware, including:

- Controller firmware
- Drive firmware
- SCSI Accessed Fault-Tolerant Enclosure (SAF-TE) firmware

For detailed instructions about how to download and install the upgrade, refer to release notes for your array. Generally speaking, all firmware downloads follow the same steps:

- Locating the upgrade on the Dot Hill web site that contains the firmware you want.
- Downloading the upgrade to a location on your network.
- Using your array software (SANscape, SANscape CLI, or array firmware, in the case of controller firmware, to “flash” the firmware to the device it updates).

6.6.1 Controller Firmware Upgrade Features

The following firmware upgrade features apply to the controller firmware:

- Redundant Controller Rolling Firmware Upgrade

  When download is performed on a dual-controller system, firmware is flashed onto both controllers without interrupting host I/O. When the download process is complete, the primary controller resets and lets the secondary controller take over the service temporarily. When the primary controller comes back on-line, the secondary controller hands over the workload and then resets itself so the new firmware can take effect. This rolling upgrade is automatically performed by the controller firmware, and the user's intervention is not necessary.

- Automatically Synchronized Controller Firmware Versions

  A controller that replaces a failed unit in a dual-controller system is often running a newer release of firmware version. To maintain compatibility, the surviving primary controller automatically updates the firmware running on the replacement secondary controller to the firmware version of the primary controller.

Note – When you upgrade your firmware, the **format**(1M) command still shows the earlier revision level. To correct this, update the drive label, using the **autoconfigure** option (option 0) of the **format**(1M) command. When you select **label**, the drive is labeled with the updated firmware version.

6.6.2 Installing Firmware Upgrades

Caution – Before updating your firmware, make sure that the version of firmware you want to use is supported for your array. Refer to http://www.dothill.com for subsequent firmware upgrade information.

To download new versions of controller firmware, disk drive firmware, or SAF-TE firmware, use one of the following tools:

- SANscape CLI (with an inband SCSI connection, for Linux and Windows hosts, and for servers running the Solaris OS).
- SANscape program (with an inband SCSI connection, for Linux and Windows hosts and servers running the Solaris OS).

Caution – You should not use both inband and out-of-band connections at the same time to manage the array or you might cause conflicts between multiple operations.

Note – To download firmware to disk drives or SAF-TE firmware to a JBOD directly attached to a host, you must use the SANscape program.

6.7 Replacing the Front Bezel and Ear Caps

Some procedures require that you remove the front bezel and the small vertical plastic caps on either side of the bezel that cover the rackmount tabs. These rackmount tabs are often referred to as “ears.”

6.7.1 Removing the Front Bezel and Ear Caps

1. Use the provided key to unlock both bezel locks.
2. Grasp the front bezel cover on both sides and pull it forward and then down.

Note – For many operations, including replacing disk drives, it is not necessary to further detach the bezel, since dropping it down moves it sufficiently out of the way.

3. Press the right bezel arm (hinge) towards the left side to release it from the chassis hole.

   The left hinge also disengages.

4. Note the location of the chassis bezel holes on each ear.

5. Remove the plastic caps from the front left and right ears of the array.

   Both plastic caps are removed in the same way.

   a. Squeeze both sides of the cap at the top and the bottom.

   b. Turn the cap toward the center of the array until it disengages and pull it free.

6.7.2 Placing the Bezel and Ear Caps Back Onto the Chassis

Each plastic cap is replaced in the same way, but be sure to place the cap with LED labels on the right ear.

1. Align the inside round notches of the cap with the round cylindrical posts (ball studs) on the ear.

2. Push the top and bottom of the ear cap onto the ear, pressing in on the top side toward the center of the array first.

3. Continue pushing the top and bottom of the ear cap onto the ear, pressing on the side toward the outside of the array.

   Do not use force when placing a cap on an ear.

Caution – Be careful to avoid "wedging" the Reset button below the LEDs on the right ear when you replace the plastic cap over it.

4. Insert the bezel arms into the chassis holes.

5. Lift the bezel into position and press it onto the front of the chassis until it is flush with the front.

6. Use the key to lock both bezel locks.

CHAPTER 7

Troubleshooting Your Array

This chapter covers the following troubleshooting topics:

- "Sensor Locations" on page 7-1
- "RAID LUNs Not Visible to the Host" on page 7-3
- "JBOD Disks Not Visible to the Host" on page 7-3
- "Controller Failover" on page 7-3
- "Recovering From Fatal Drive Failure" on page 7-4
- "Using the Reset Button" on page 7-7
- "Troubleshooting Flowcharts" on page 7-7
  - "Power Supply and Fan Module" on page 7-8
  - "Drive LEDs" on page 7-10
  - "Front-Panel LEDs" on page 7-14
  - "I/O Controller Module" on page 7-18

To check front-panel and back-panel LEDs, see Chapter 5.

For more troubleshooting tips, refer to the *SANnet II U320 SCSI Array Release Notes* at:

http://www.dothill.com/manuals

7.1 Sensor Locations

Monitoring conditions at different points within the array enables you to avoid problems before they occur. Cooling element, temperature, voltage, and power sensors are located at key points in the enclosure. The SCSI Accessed Fault-Tolerant Enclosure (SAF-TE) processor monitors the status of these sensors. Refer to the *SANnet II Family RAID Firmware User's Guide* for additional details.

The following table describes the location of the enclosure devices from the back of the SANnet II U320 SCSI array orientation as shown in Figure 7-1.

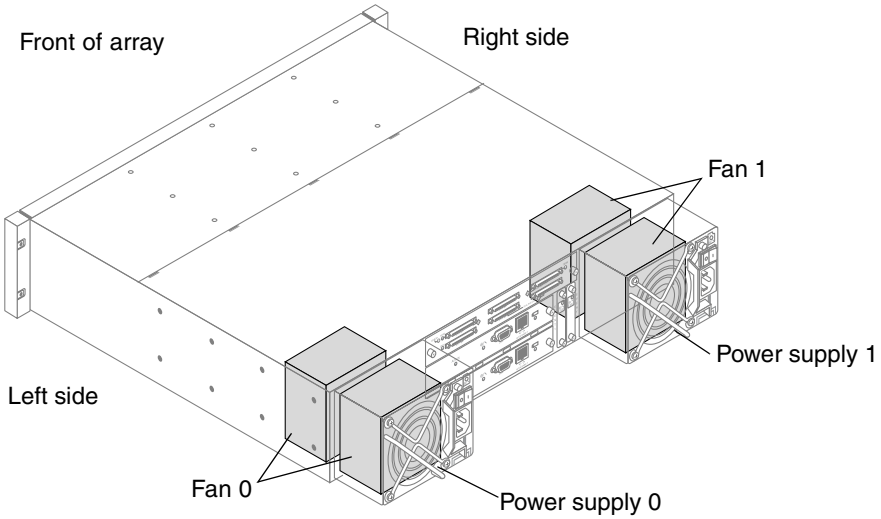

Figure 7-1 SANnet II U320 SCSI Array Enclosure Device Orientation

The enclosure sensor locations and alarm conditions are described in the following table.

Table 7-1 Sensor Locations and Alarms

Sensor Type	Description	Alarm Condition
Fan 0	Left side power supply fan	< 900 RPM
Fan 1	Right side power supply fan	< 900 RPM
PS 0	Left side power supply	Voltage, temperature, or fan fault
PS 1	Right side power supply	Voltage, temperature, or fan fault
Temp 0	Left drive temperature sensor	< 32°F (0°C) or > 131°F (55°C)
Temp 1	Center drive temperature sensor	< 32°F (0°C) or > 131°F (55°C)
Temp 2	Temperature sensor on left side power supply module	< 32°F (0°C) or > 140°F (60°C)
Temp 3	Temperature sensor on left side EMU module	< 32°F (0°C) or > 140°F (60°C)
Temp 4	Temperature sensor on right side EMU module	< 32°F (0°C) or > 140°F (60°C)
Temp 5	Right drive temperature sensor	< 32°F (0°C) or > 131°F (55°C)
Temp 6	Temperature sensor on right side power supply module	< 32°F (0°C) or > 140°F (60°C)

Table 7-1 Sensor Locations and Alarms *(Continued)*

Sensor Type	Description	Alarm Condition
Disk Slot 0–11	Disk slot identifier refers to the backplane FRU to which disks are connected	Not applicable
Temp CPU	Temperature sensor on RAID controller	> 203°F (95°C)
Temp Board 1	Temperature sensor on RAID controller	> 185°F (85°C)
Temp Board 2	Temperature sensor on RAID controller	> 185°F (85°C)

7.2 RAID LUNs Not Visible to the Host

By default, all RAID arrays are preconfigured with one or two logical drives. For a logical drive to be visible to the host server, its partitions must be mapped to host LUNs. To make the mapped LUNs visible to a specific host, perform the steps required for your operating system, if there are any special requirements. For host-specific information about different operating systems, see:

- Appendix D for the Solaris OS.
- Appendix E for Windows 2003 server or Windows 2000 advanced server.
- Appendix F for a Linux server.
- Appendix G for an IBM server running the AIX OS.
- Appendix H for an HP server running the HP-UX OS.

7.3 JBOD Disks Not Visible to the Host

If you attach a JBOD array directly to a host server and do not see the drives on the host server, check that the cabling is correct and that there is proper termination. For details, see the special cabling procedures in Appendix B.

For additional information about specific servers, see the operating system appendices in this document.

7.4 Controller Failover

Controller failure symptoms are as follows:

- The surviving controller sounds an audible alarm.
- The center LED (status symbol) flashes amber on the failed controller.
- The surviving controller sends event messages announcing the controller failure of the other controller.

A “SCSI Bus Reset Issued” alert message is displayed for each of the SCSI channels. A “Redundant Controller Failure Detected” alert message is also displayed. These messages are also written to the event log.

If one controller in the redundant controller configuration fails, the surviving controller temporarily takes over for the failed controller until it is replaced.

A failed controller is managed by the surviving controller which disables and disconnects from its counterpart while gaining access to all the signal paths. The surviving controller then manages the ensuing event notifications and takes over all processes. It is always the primary controller regardless of its original status, and any replacement controller afterward assumes the role of the secondary controller.

The failover and failback processes are completely transparent to the host.

Controllers are hot-swappable if you are using a redundant configuration, and replacing a failed unit takes only a few minutes. Since the I/O connections are on the controllers, you might experience some unavailability between the times when the failed controller is removed and a new one is installed in its place.

To maintain your redundant controller configuration, replace the failed controller as soon as possible. For details, refer to the *SANnet II Family FRU Installation Guide*.

7.5 Recovering From Fatal Drive Failure

With a redundant RAID array system, your system is protected with the RAID parity drive and a global spare or spares.

A **FATAL FAIL** occurs when more drives fail than your RAID redundancy can accommodate. The redundancy of your RAID array depends on your configuration. In a RAID 3 or RAID 5 configuration, two or more drives must fail for a **FATAL FAIL** status. In a RAID 1 configuration, you can lose multiple drives without fatal failure if all the failed drives reside on one side of a mirrored pair.

It might be possible to recover the RAID from a **FATAL FAIL**. However, it might be impossible to do a full data recovery, depending on the circumstances of the failure. It is important to check your recovered data using the data application or host-based tools following a **FATAL FAIL** recovery.

It is rare for two or more drives to fail at the same time. To minimize the chance of this happening, regular RAID integrity checks should be performed. For RAID 3 and RAID 5, this can be done using the array console’s “regenerate Parity” option, or using the SANscape CLI **`check parity`** command. Refer to the *SANnet II Family RAID Firmware User’s Guide* for details on the “regenerate Parity” option. Refer to the *SANscape CLI User’s Guide* for details on the **`check parity`** command.

If a multiple drive failure has occurred, it might be possible to recover by performing the following steps:

1. Discontinue all I/O activity immediately.

2. To cancel the beeping alarm, from the firmware Main Menu, choose **system Functions → Mute beeper**.

   See "Silencing Audible Alarms" on page 6-4 for more information about silencing audible alarms.

3. Physically check that all the drives are firmly seated in the array and that none have been partially or completely removed.

4. In the firmware Main Menu, choose **view and edit Logical drives**, and look for:

   Status: **FAILED DRV** (one failed drive)
   Status: **FATAL FAIL** (two or more failed drives)

5. Highlight the logical drive, press **Return**, and choose **view scsi drives**.

   If two physical drives have a problem, one drive has a **BAD** status and one drive has a **MISSING** status. The **MISSING** status is a reminder that one of the drives might be a "false" failure. The status does not tell you which drive might be a false failure.

Caution – Resetting the controller invalidates the data still in write-cache. Since it is impossible to know whether data is in cache or has been written to disk, you should not reset the controller. Instead, use the **Shutdown Controller** menu option and choose **Yes** when the **Reset Controller?** prompt is displayed.

Note – Shutting down the controller does not guarantee absolute data integrity. It can, however, restore most of the data, excluding whatever remains in cache when you reset the controller.

6. If a single drive fails, remove the failed drive and replace it with a new drive.

7. If two or more drives fail, proceed as follows:

   a. For a logical drive configured for RAID 3 or RAID 5, if the order of drive failure can be determined, perform the following steps.

      i. Pull the first failed drive only.

      ii. Note the locations of the remaining failed drives.

   b. For a logical drive configured for RAID 1, perform the following steps.

      i. If both paired drives in a RAID 1 set are failed, pull the first failed drive.

      ii. Note the location of the remaining failed drive.

Note – The first failed drive can be determined via the controller event log. If it cannot be determined which drive failed first, then there might be data inconsistencies and the array should be file system checked after the reset.

8. Reset the controller.

   From the controller firmware's Main Menu, choose **system Functions → Shutdown controller** and choose **Yes** when the **Shutdown Controller?** prompt is displayed.

9. When the system comes back up, view the logical drives and verify that the **FATAL FAIL** status has changed to "degraded".

Note – If the status is still **FATAL FAIL**, you might have lost all data on the logical drive and you must recreate the logical drive. Proceed with step 14a.

---

10. If the logical drive has changed to "degraded," run **`fsck(1M)`**.

11. After **`fsck(1M)`** completes successfully, replace the pulled drive with a new (GOOD) drive if the event log indicates that the drive should be replaced.

12. From the Main Menu, choose **system Functions → Shutdown Controller** and then choose **Yes** to confirm that you want to shut down the controller.

Caution – Resetting the controller invalidates the data still in write cache. Since it is impossible to know whether data is in cache or has been written to disk, you should not reset the controller. Instead, use the **Shutdown Controller** menu option and choose **Yes** when the **Reset Controller?** prompt is displayed.

Note – Shutting down the controller does not guarantee absolute data integrity. It can, however, restore most of the data, excluding whatever remains in cache when you reset the controller.

A status and confirmation message tells you that the controller shutdown is complete and asks if you want to reset the controller.

13. Choose **Yes** to reset the controller.

    After resetting the controller, if there is a false bad drive, the array automatically starts rebuilding the failed logical drive.

14. If the array does not automatically start rebuilding the logical drive, check the status under **view and edit Logical drives**.

    - If the status is **FAILED DRV**, manually rebuild the logical drive.

      Refer to the *SANnet II Family RAID Firmware User's Guide* for more information.

    - If the status is still **FATAL FAIL**, you might have lost all data on the logical drive, and it might be necessary to re-create the logical drive.

      Proceed with the following procedures:

    a. Replace the failed drive.

       Refer to the *SANnet II Family FRU Installation Guide* for more information.

b. Delete the logical drive.

   Refer to the *SANnet II Family RAID Firmware User's Guide* for more information.

c. Create a new logical drive.

   Refer to the *SANnet II Family RAID Firmware User's Guide* for more information.

Note – As physical drives fail and are replaced, the rebuild process regenerates the data and parity information that was on the failed drive. However, the NVRAM configuration file that was present on the drive is not recreated. For details on restoring the NVRAM configuration file to the drive, refer to the *SANscape CLI User's Guide*.

Rebuilding the logical drive restores the RAID integrity to a self-consistent state. This does not guarantee that the data has not been corrupted. All possible application checks should be performed to ensure that the data is not corrupted before it is used for business or production purposes.

For additional troubleshooting tips, refer to the release notes for your array.

7.6 Using the Reset Button

To test that the LEDs work, using a paperclip, press and hold the Reset button for 5 seconds. All the LEDs should change from green to amber when you perform this test. Any LED that fails to light indicates a problem with the LED. When you release the Reset button, the LEDs return to their initial state. See Chapter 5 for more information.

To silence audible alarms that are caused by component failures, use a paperclip to push the Reset button. See "Silencing Audible Alarms" on page 6-4 for more information about silencing audible alarms.

7.7 Troubleshooting Flowcharts

This section provides flowcharts to illustrate common troubleshooting methods.

The flowcharts included in this section are:

- "Power Supply and Fan Module" on page 7-8
- "Drive LEDs" on page 7-10
- "Front-Panel LEDs" on page 7-14
- "I/O Controller Module" on page 7-18

For the JBOD and expansion unit flowchart, see "Troubleshooting SANnet II U320 SCSI JBOD Arrays" on page B-13.

For overview information about LEDs, see Chapter 5.

For information about replacing modules, refer to the *SANnet II Family FRU Installation Guide*.

Caution – Whenever you are troubleshooting and replacing components, there is an increased possibility of data loss. To prevent any possible data loss, back up user data to another storage device prior to troubleshooting your array.

7.7.1 Power Supply and Fan Module

The following flowchart provides troubleshooting procedures for the power supply and fan module.

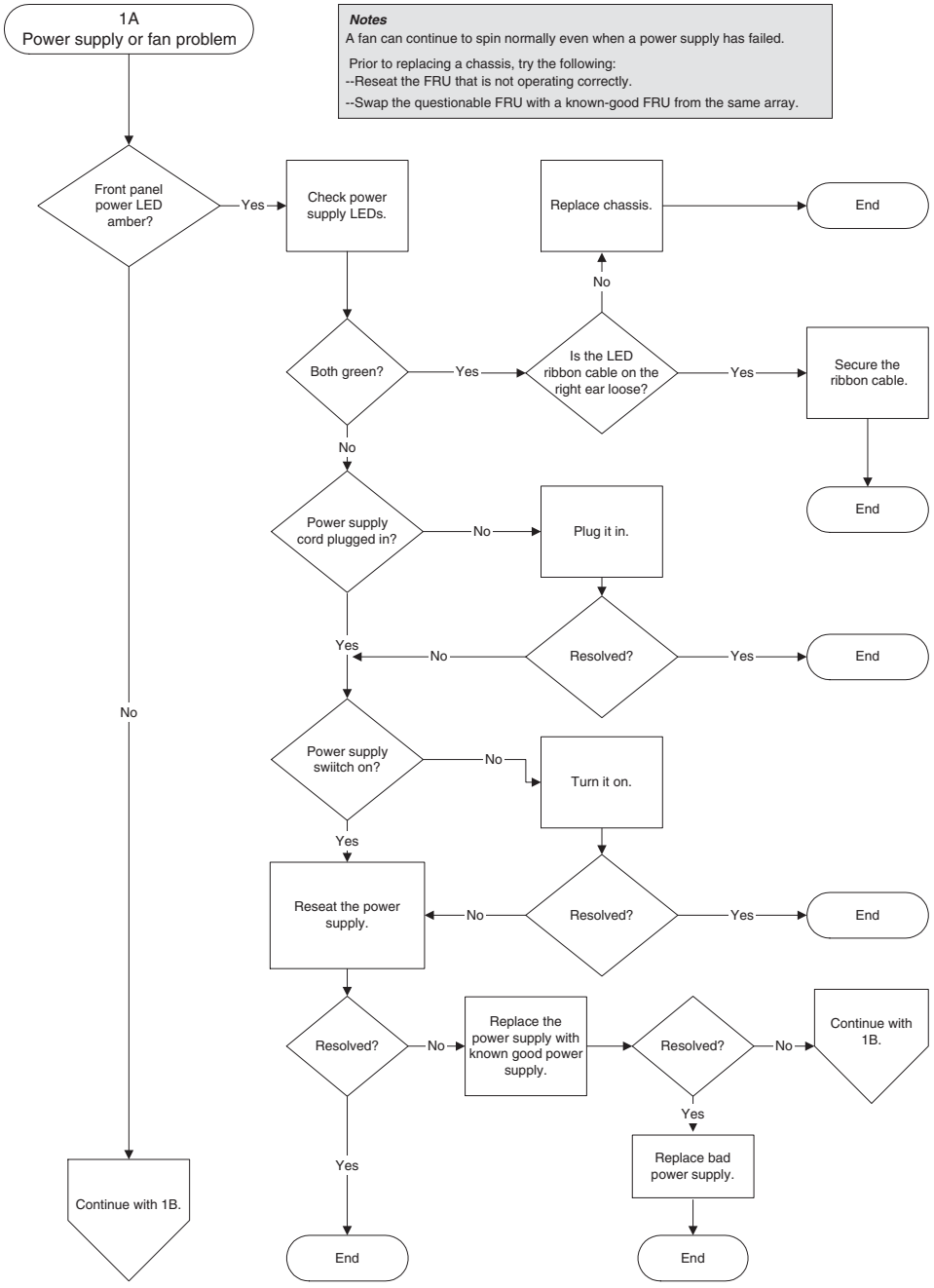

Figure 7-2 Power Supply or Fan Module Flowchart, 1 of 2

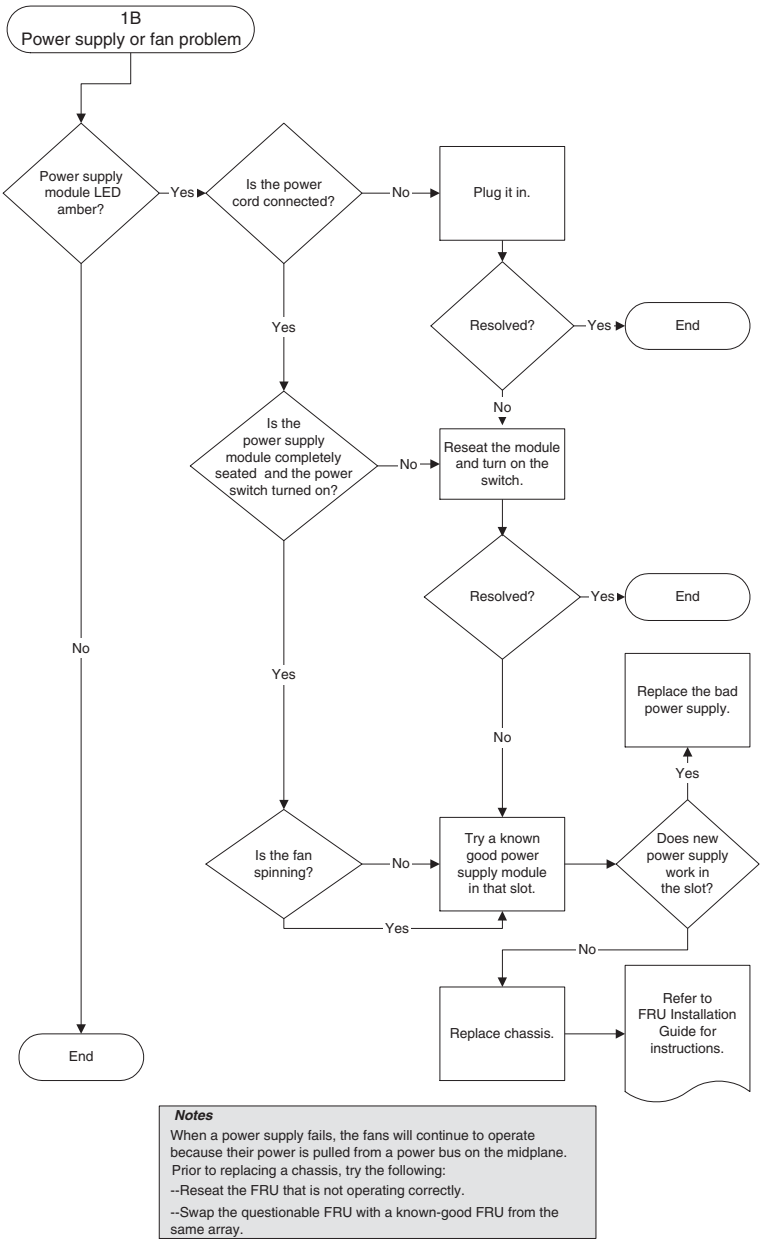

Figure 7-3 Power Supply or Fan Module Flowchart, 2 of 2

7.7.2 Drive LEDs

Before you perform the drive LED troubleshooting procedures, you might want to use the firmware application to identify a failed drive. For details, refer to the *SANnet II Family RAID Firmware User's Guide*.

For overview information about drive LEDs and how they work, see “Front-Panel LEDs” on page 5-2.

Caution – When you rotate or replace drives, make sure that all I/O is stopped. To prevent any possible data loss, back up user data to another storage device prior to replacing a disk drive.

The following flowchart provides troubleshooting procedures for drive LEDs.

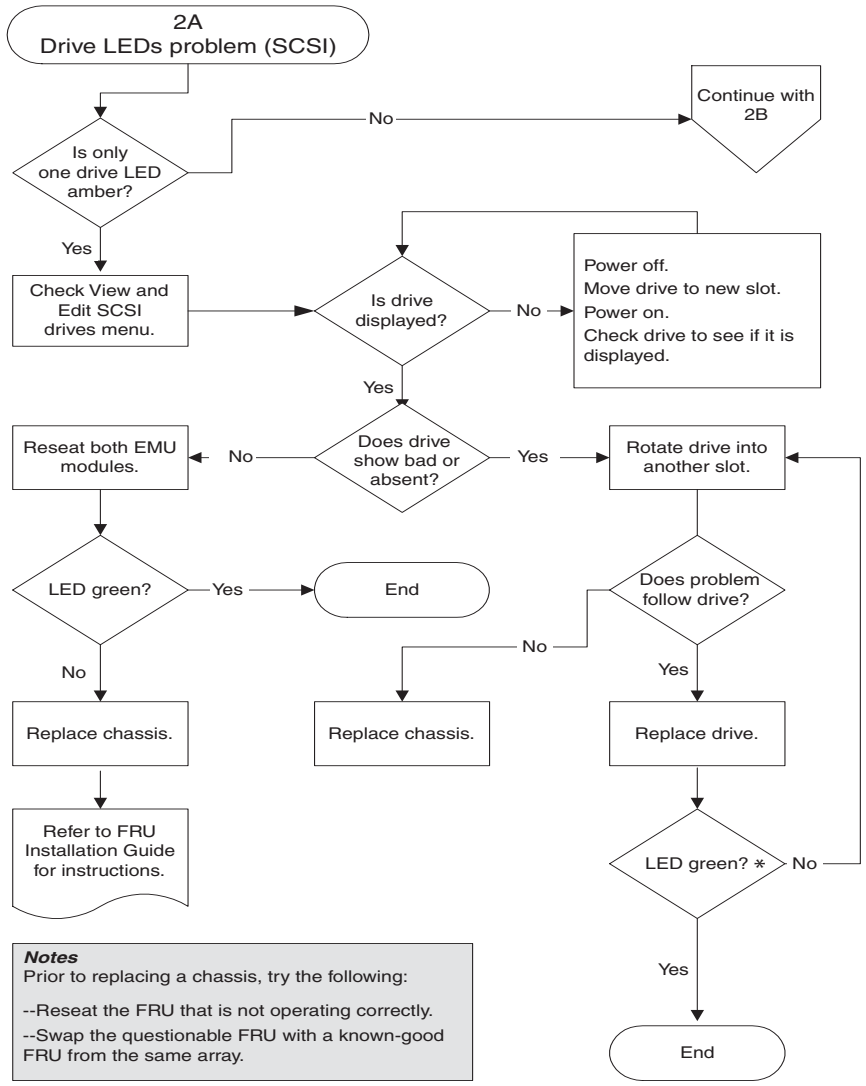

Figure 7-4 Drive LEDs Flowchart, 1 of 3

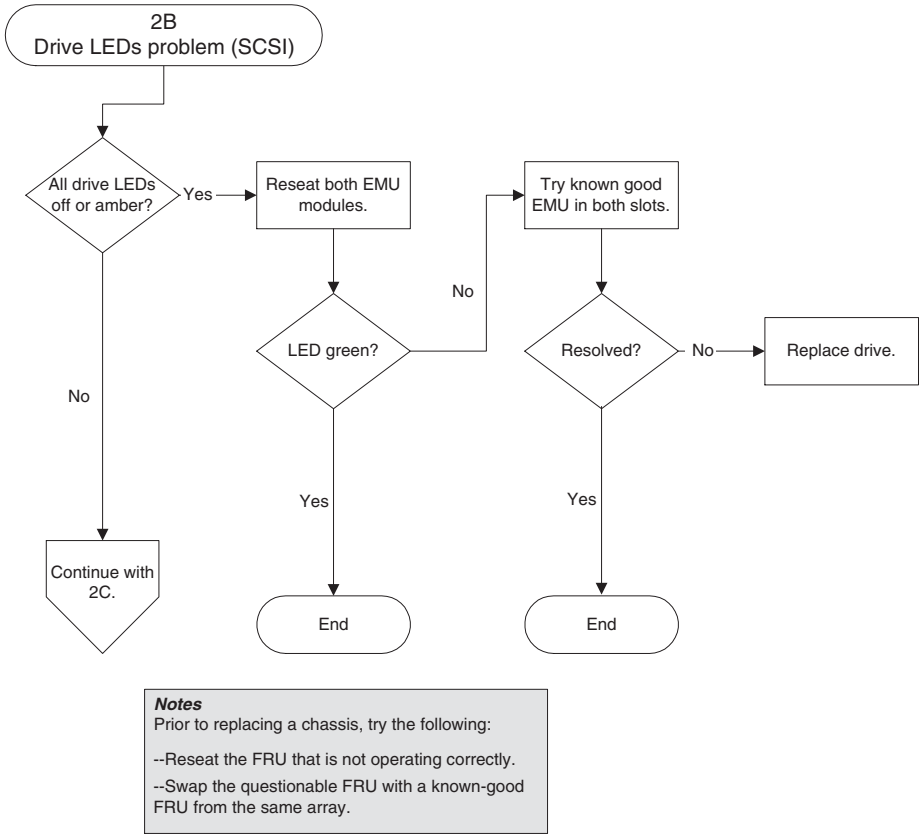

Figure 7-5 Drive LEDs Flowchart, 2 of 3

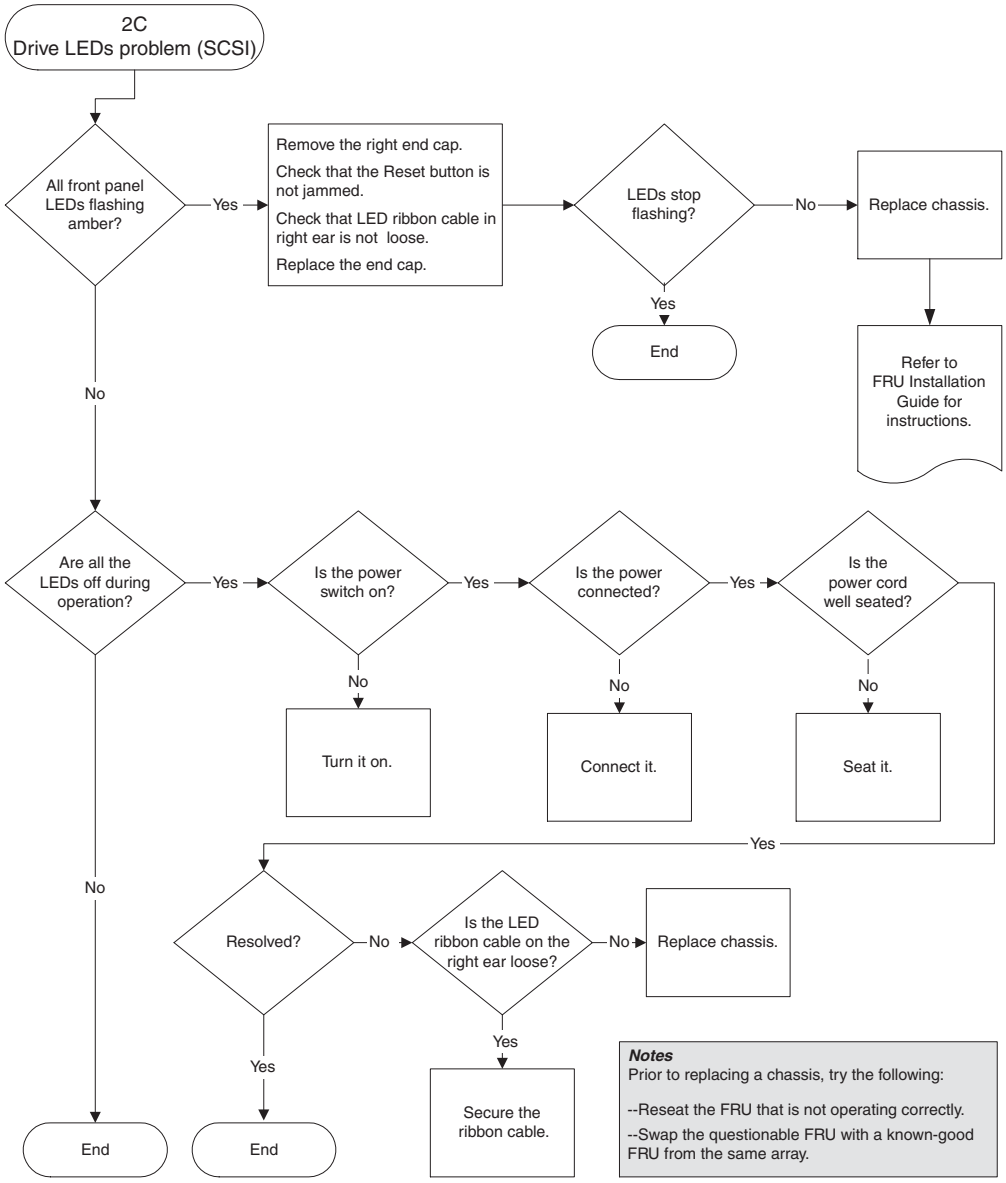

Figure 7-6 Drive LEDs Flowchart, 3 of 3

For more information about checking and replacing drive modules, refer to the *SANnet II Family FRU Installation Guide*.

7.7.3 Front-Panel LEDs

The following flowchart provides troubleshooting procedures for the SANnet II U320 SCSI array front-panel LEDs.

Note – The LED ribbon cable referred to in this flowchart is the white cable that connects the front-panel LEDs to the midplane. It is located on the right front-panel ear and is directly attached to the LEDs.

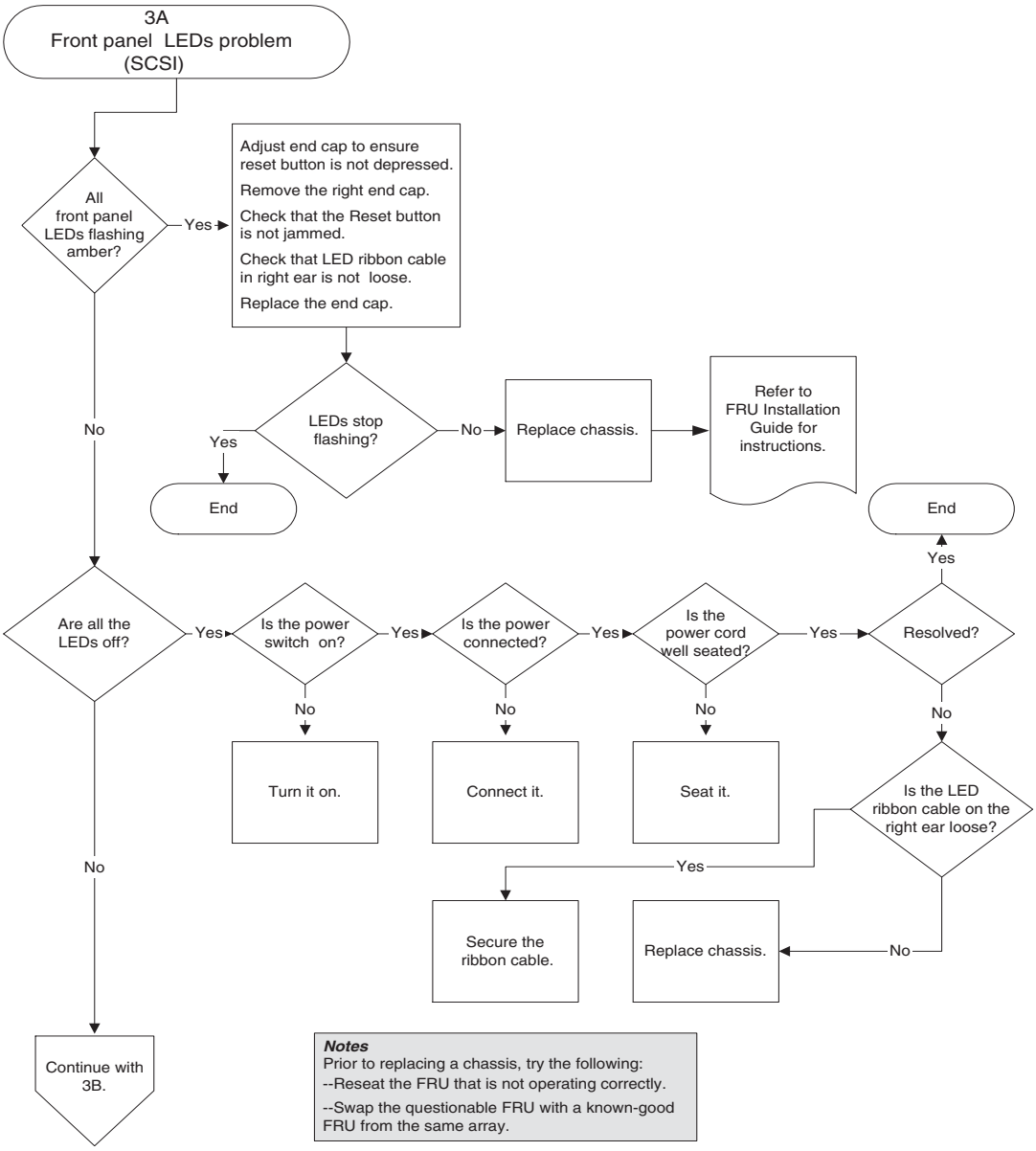

Figure 7-7 Front-Panel LEDs Flowchart, 1 of 5

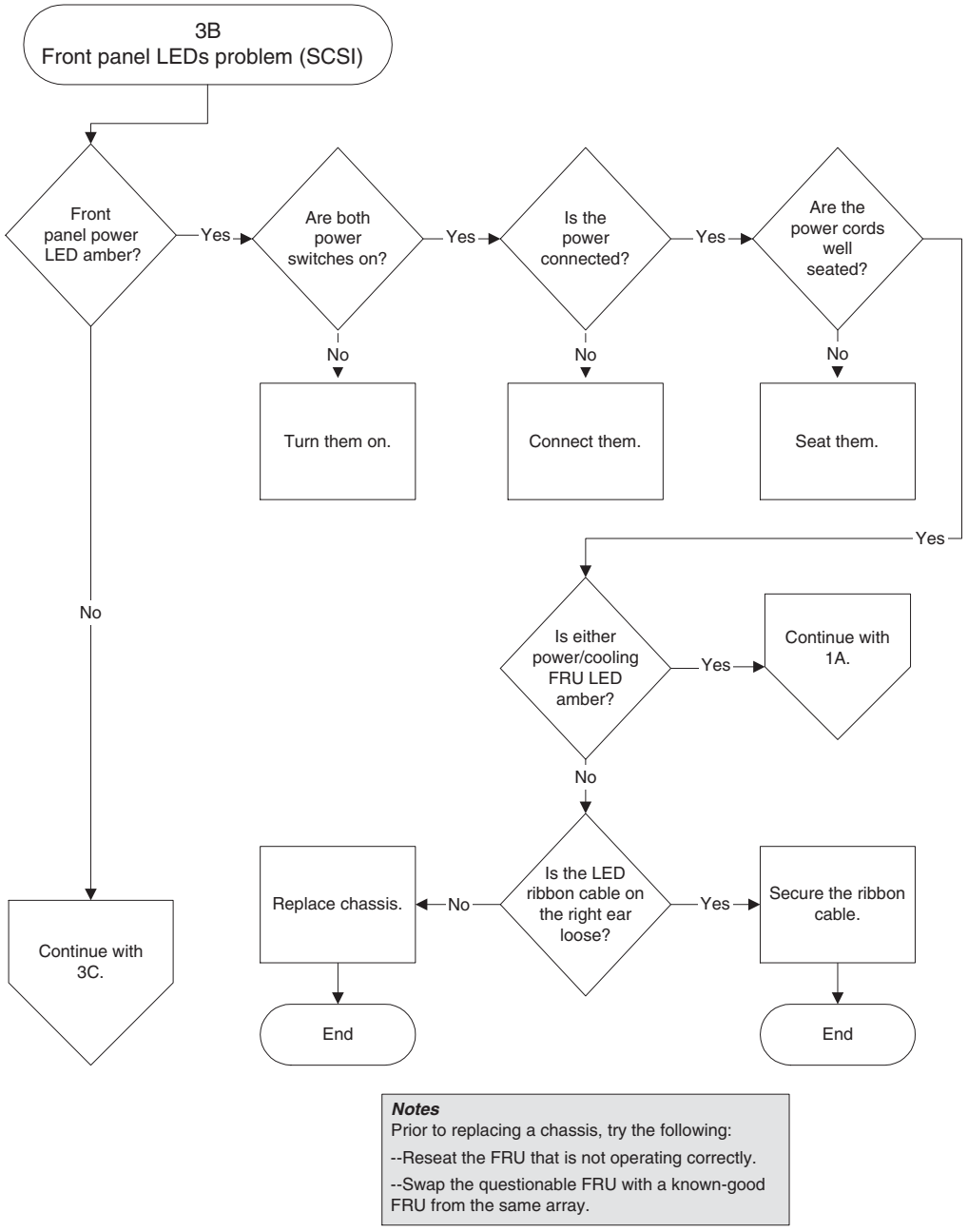

Figure 7-8 Front-Panel LEDs Flowchart, 2 of 5

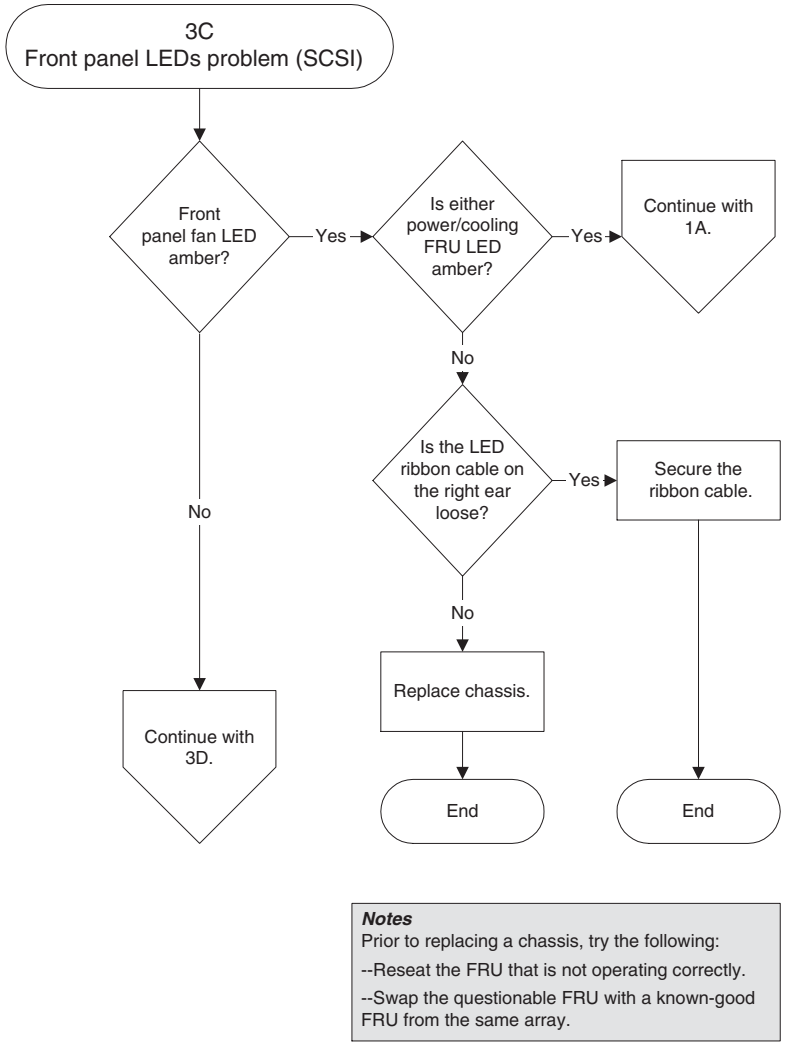

Figure 7-9 Front-Panel LEDs Flowchart, 3 of 5

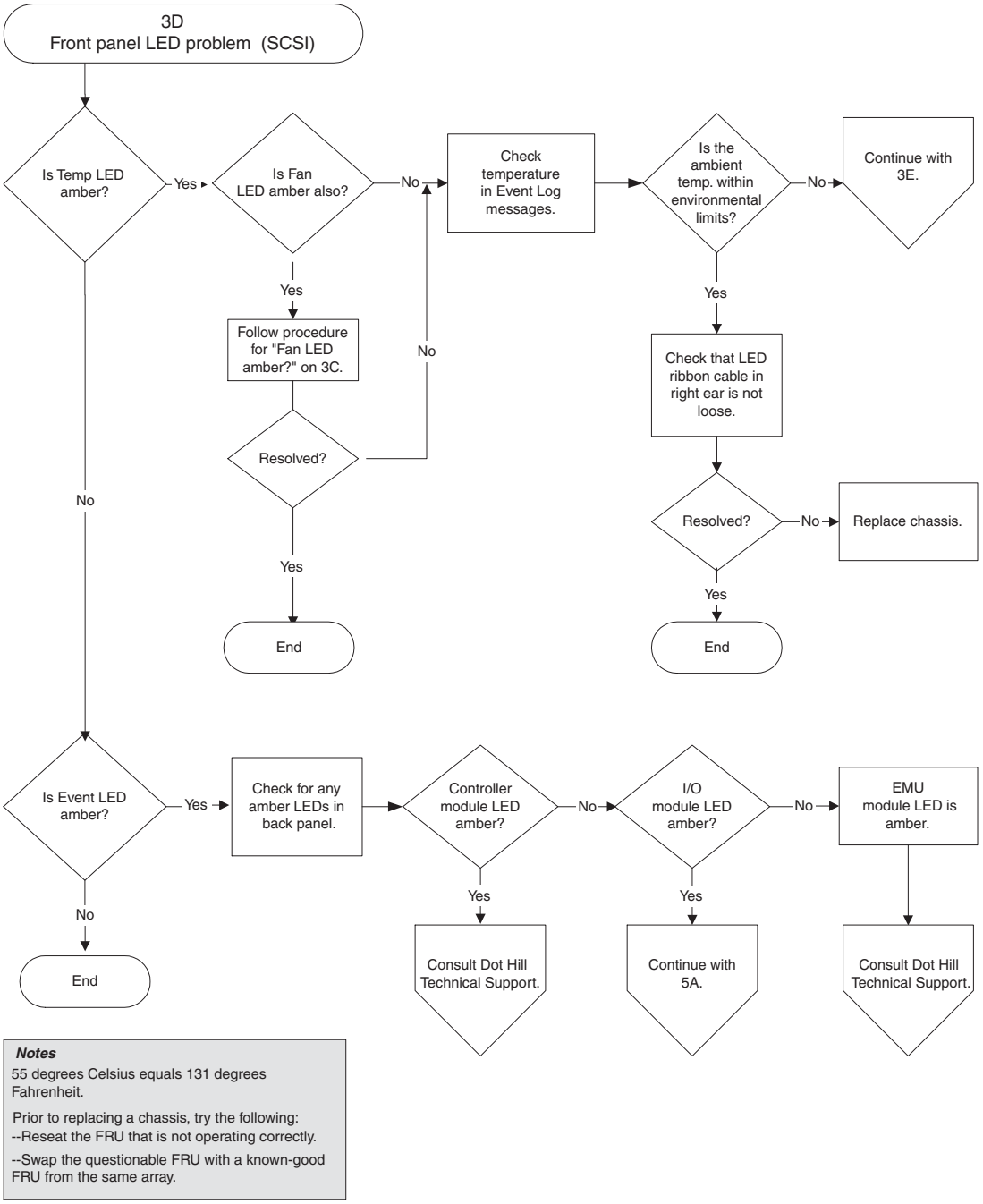

Figure 7-10 Front-Panel LEDs Flowchart, 4 of 5

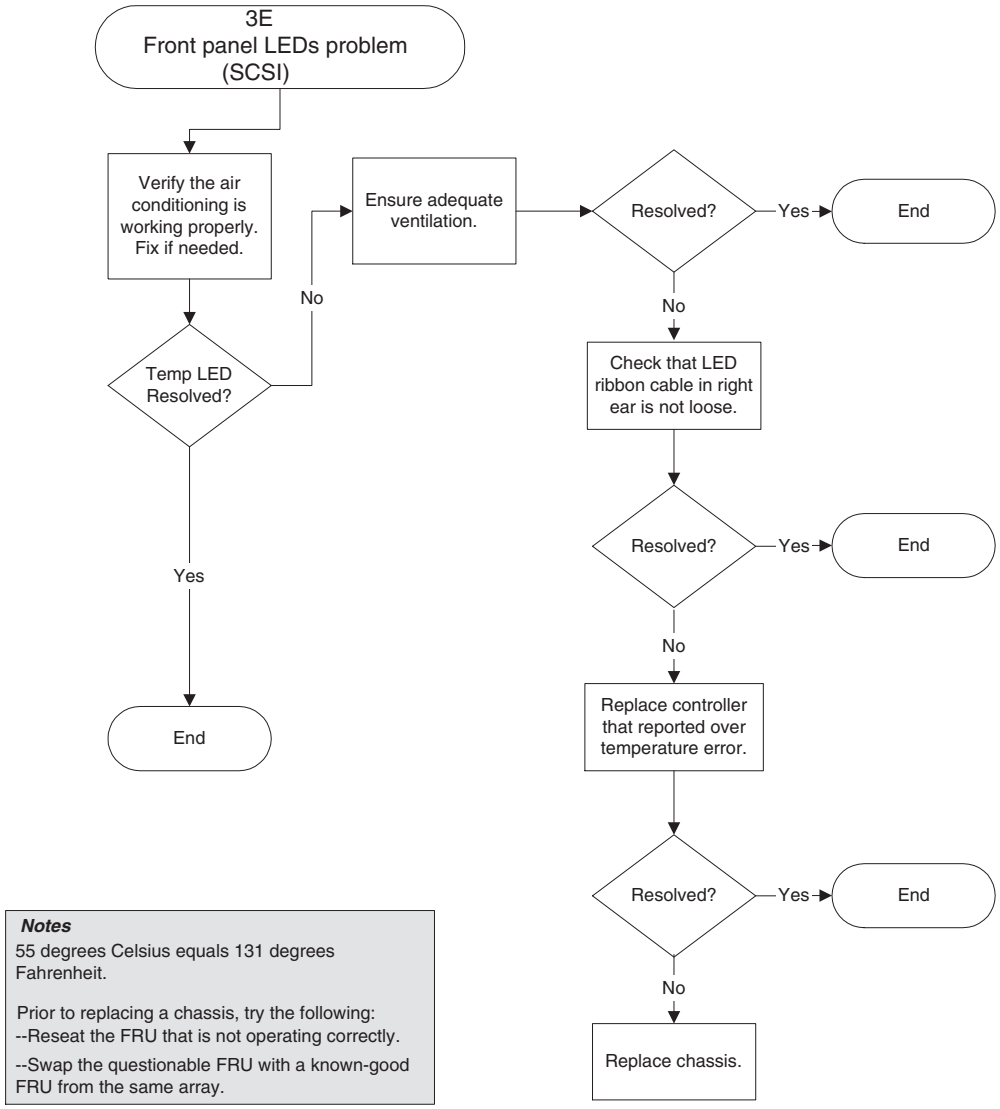

Figure 7-11 Front-Panel LEDs Flowchart, 5 of 5

7.7.4 I/O Controller Module

The following flowchart provides troubleshooting procedures for the I/O controller module.

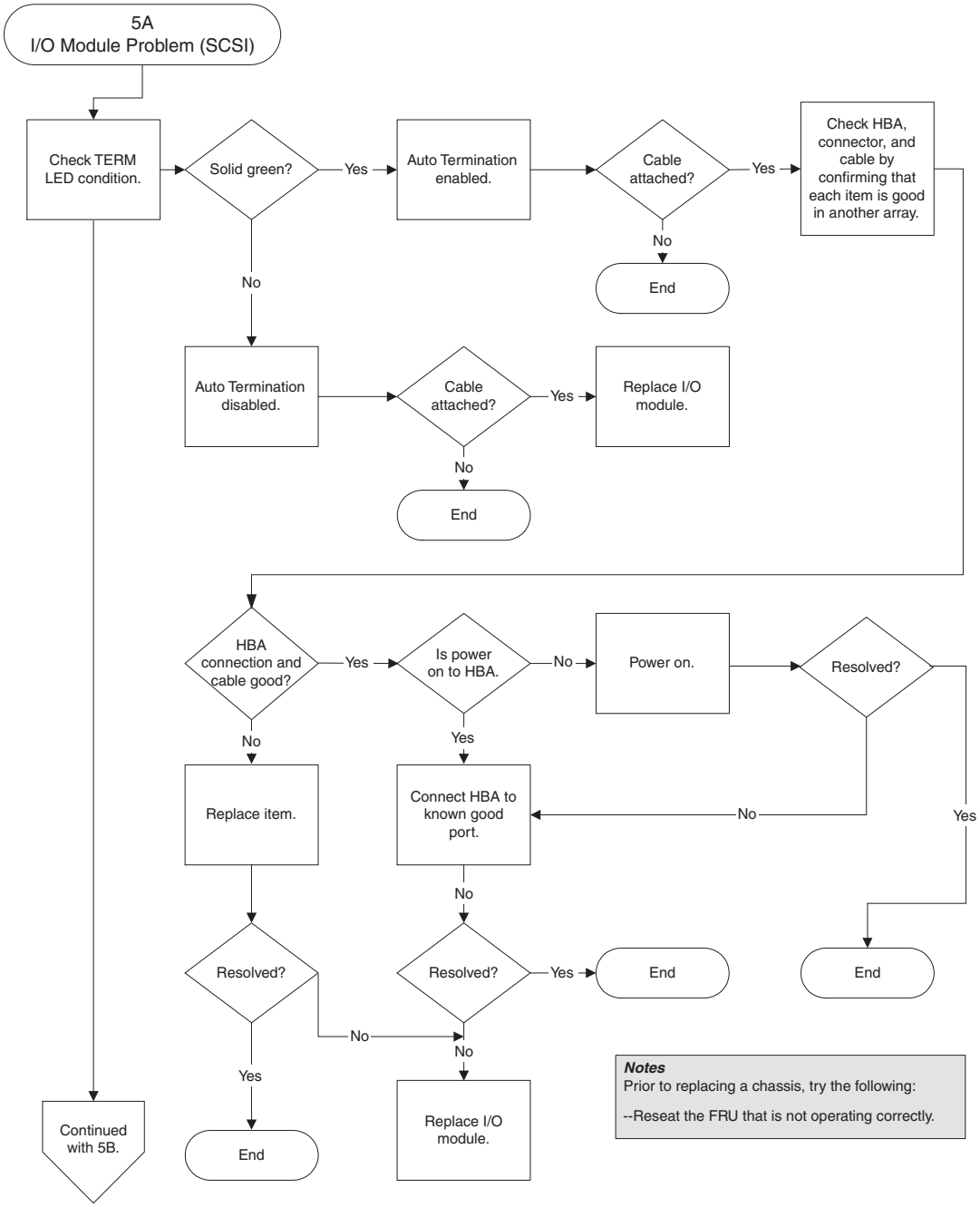

Figure 7-12 I/O Controller Module Flowchart, 1 of 2

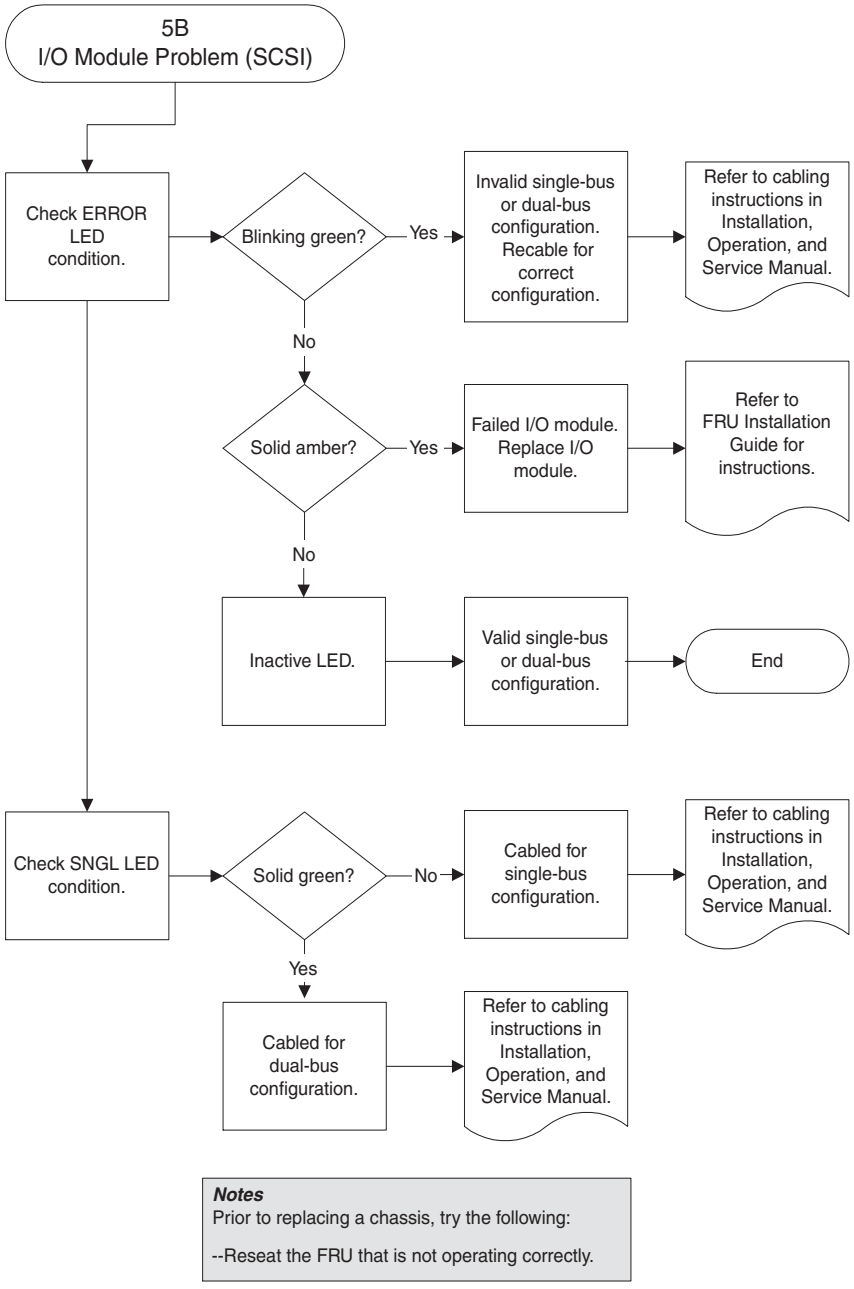

Figure 7-13 I/O Controller Module Flowchart, 2 of 2

APPENDIX A

SCSI Array Specifications

This appendix provides the specifications for the SANnet II U320 SCSI array. The topics covered are:

- "Physical Specifications" on page A-1
- "Summary of SANnet II U320 SCSI Array Specifications" on page A-2
- "Agency Approvals and Standards" on page A-3

A.1 Physical Specifications

Table A-1 SANnet II U320 SCSI Array Physical Specifications

Description	Desktop	Rackmount
Height	3.64 in. (9.25 cm)	2U (3.5 in./8.89 cm)
Width	19 in. (48.26 cm)	17.56 in. (44.60 cm) body
Depth	Main chassis 18 in. (45.72 cm)	Main chassis 18 in. (45.72 cm)
	To back of power supply: 20 in. (50.8 cm)	To back of power supply: 20 in. (50.8 cm)
	To back of power supply handle: 21 in. (53.34 cm)	To back of power supply handle: 21 in. (53.34 cm)
Weight SANnet II U320 (fully loaded)	63.2 lb (28.7 kg) with 300-GB drives	57.2 lb (26.0 kg) with 300-GB drives
Weight (fully loaded SANnet II U320 JBOD or expansion unit)	60.0 lb (27.2 kg) with 300-GB drives	54.0 lb (24.5 kg) with 300-GB drives

Note – Add 12.8 lb (5.8 kg) for packaging if you want to know the shipping weight of your array or expansion unit.

A.2 Summary of SANnet II U320 SCSI Array Specifications

Table A-2 Summary of SANnet II U320 SCSI Array Specifications

Feature	Description
General	• 12 hot-pluggable drives in a 2U high (3.5-inch) chassis • Ultra 320 SCSI buses • Autosensing AC or DC power supplies • Dual-host access in certain configurations
Density	• Up to 10.8 TB (using 300-GB drives) in a RAID array • 21-inch chassis depth • RAID supports one expansion chassis in a dual-host configuration, or two expansion chassis in a single-host configuration
Reliability	• Redundant hot swappable FRUs • Single or redundant active/active hot-swappable RAID controllers • Redundant hot swappable event-monitoring units (EMU) • N+1 hot swappable power and cooling • NEBS Level 3 and HALT test certified; designed to meet 99.999% reliability
RAID System Storage Resource Management	• Web-based 10/100BASE-T Ethernet support • Serial port out-of-band support with modem control • RAID Levels 0, 1, 1+0, 3, 5, 3+0, 5+0 • Rolling firmware upgrades (with redundant RAID controllers) • Up to 128 LUNs • SNMP traps and MIB in firmware • 512 MB cache memory standard • Four Ultra320 SCSI channels • User-configurable as drive or host • Support for SANscape and SANscape Alert management software and the SANscape Command-Line Interface (CLI) utility

A.3 Agency Approvals and Standards

Table A-3 Agency Approvals and Standards

Product Safety	
Country	**Standard**
U.S.	UL Listed to UL60950:2000, 3rd Edition
Canada	CSA Standard CAN/CSA-C22.2 No. 60950-00 3rd Edition
Germany	TÜV
European Union	EN 60950:2000
Japan	Part of World-wide CB Scheme
Australia	Part of World-wide CB Scheme
Argentina	Resolution 92-98 (S-Mark)
Germany	GS mark (ergonomics) (Rheinland)
Russia	Part of World-wide CB Scheme (GOST-R mark)
Russia	Hygienic Mark (ergonomics)
Electromagnetic Compatibility	
Country	**Standard**
U.S.	FCC #47, Part 15, Subpart B, Class B
Canada	ICES-003
Japan	VCCI Class B
European Union	EN 55022:1998 Class B
Australia/New Zealand	AS/NZS 3548:1996
Taiwan	BSMI CNS 13438 Class B
Russia	GOST-R mark
Germany	Same as European Union
Argentina	S mark
Electromagnetic Interference	
Test	**Standard**
Harmonics Emissions	EN 61000-3-2:2000 (No Limits)
Voltage Flicker	EN 61000-3-3:1995/A1:2001 (No Limits)
ESD	EN 55024 (8kV Contact, 15kV Air)
RF Field	EN 55024 (10V/m)
Electrical Fast Transient Burst	EN 55024 (1kV I/O, 2kV Power)

Table A-3 Agency Approvals and Standards *(Continued)*

Surge	EN 55024 (1kV I/O, 1kV Power L-L, 2kV Power L-G)
RF Conducted	EN 55024 (3V I/O and Power)
Power Frequency Magnetic Field	EN 55024 (N/A monitors only)
Voltage Dip and Interruption	EN 55024 (0V/0.5cycle, 70%V/0.5sec, 0V/5sec)

APPENDIX B

Cabling JBODs

You can connect a SANnet II U320 JBOD (Just a Bunch of Disks, no controller) array directly to a host server.

This appendix covers the following topics:

- "Known Limitations Affecting SANnet II U320 SCSI JBOD Arrays" on page B-2
- "Connecting a SANnet II U320 JBOD Array" on page B-2
- "Cabling a Single-Bus JBOD with One Host Connection" on page B-3
- "Cabling a Single-Bus JBOD with Two Host Connections" on page B-4
- "Cabling a Split-Bus, Single-Initiator JBOD Configuration" on page B-5
- "Cabling a Split-Bus, Multi-Initiator JBOD Configuration" on page B-7
- "Overview of Optional Software Monitoring and Management Tools" on page B-9
- "Monitoring with SANscape" on page B-9
- "Event Messages from the SANscape Alert" on page B-12
- "Monitoring with the SANscape CLI" on page B-12
- "Downloading Firmware to Disk Drives in a JBOD" on page B-13
- "Managing Disks in the SANnet II U320 JBOD Array" on page B-13
- "Troubleshooting SANnet II U320 SCSI JBOD Arrays" on page B-13

Caution – Physical drive IDs are set based on the cabling on the array when it is powered up. If you are switching from single-bus mode to split-bus mode or from split-bus mode to single-bus mode, the physical drive IDs change after you power off, change the cabling, and then power on. If you change physical drive IDs on the array, check that your application points to the correct IDs.

Caution – When you connect or disconnect SCSI cables, the host I/O must be inactive.

Caution – The I/O module is hot-serviceable, which means that you can replace it or change its cables while the array is powered on, but the SCSI host buses connected to the array must be inactive.

B.1 Known Limitations Affecting SANnet II U320 SCSI JBOD Arrays

Limitations affecting the SANnet II U320 SCSI JBOD array are listed below:

- Daisy-chaining is not supported.
- SANscape software supports SANnet II U320 SCSI JBOD arrays. However, since SANnet II U320 SCSI JBOD arrays do not have a RAID controller or RAID controller firmware to manage the disks, this software support is necessarily limited. Monitoring functionality that does not require a RAID controller or RAID controller firmware works in the same way it does for RAID arrays. For details, see "Monitoring with SANscape" on page B-9.
- The SANscape CLI supports SANnet II U320 SCSI JBOD arrays. However, since SANnet II U320 SCSI JBOD arrays do not have a RAID controller or RAID controller firmware to manage the disks, this CLI support is necessarily limited. For details, see "Monitoring with the SANscape CLI" on page B-12.

B.2 Connecting a SANnet II U320 JBOD Array

The SCSI specification states that the maximum bus length for Ultra3 SCSI is 12 meters (39.4 feet) for multidrop connections. The SANnet II U320 JBOD arrays use a multidrop implementation. The ports on each channel are connected to the same physical SCSI bus.

Taking into account the internal bus length of .5 meters (1.6 feet), and the internal SCSI bus length of the host, the maximum SCSI bus length for each channel is 12 meters (39.4 feet) when connected to an LVD host adapter.

You must ensure that the length of all cables to any connected nodes, as well as the internal bus length of .5 meters (1.6 feet) internal to the SANnet II U320 JBOD array and the internal bus length of the host, is less than 12 meters (39.4 feet) in total. Also include the jumper cable length of .3 meters (.98 feet) if the JBOD is being used in a single-bus configuration.

The longest Ultra3 cable qualified by Dot Hill is 10 meters (32.8 feet) in length.

When connected to single-ended host adapters, the longest supported bus length per channel is 1.5 meters (4.9 feet).

Note – If you connect two hosts to the same channel, you must change the scsi-initiator-id of one host adapter as described in the host adapter documentation. When either of these hosts is subsequently booted, SCSI reset warnings are displayed on the other host.

B.3 Cabling a Single-Bus JBOD with One Host Connection

To connect a JBOD in a single-bus configuration to a single host, connect the following ports:

- Connect the lower left input port to the upper right port of the JBOD with the SCSI jumper cable.
- Connect the lower right input port to one host with a SCSI cable.

Caution – *Before* you disconnect a cable from the array, the host bus on that cable must be inactive.

Caution – Physical drive IDs are set based on the cabling on the array when it is powered up. If you are switching from single-bus mode to split-bus mode or from split-bus mode to single-bus mode, the physical drive IDs change after you power off, change the cabling, and then power on. If you change physical drive IDs on the array, ensure that your application points to the correct IDs.

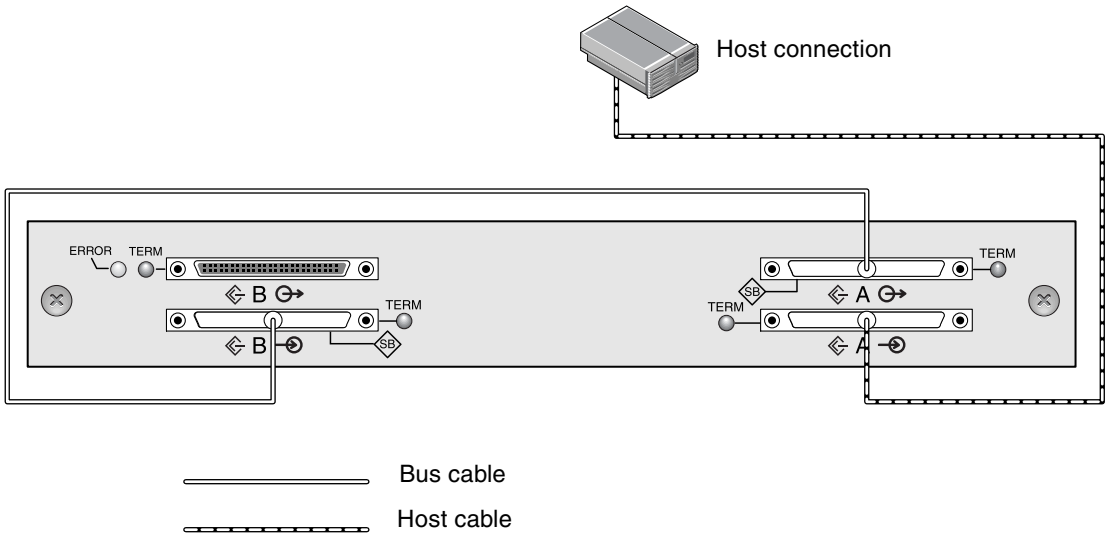

Figure B-1 A Single-Bus JBOD with One Host Connection (Rear View)

The following table shows the default physical drive IDs for a 12-drive JBOD when you set up a single-bus configuration. The physical drive IDs are 0–13, with IDs 6 and 7 reserved for host HBA connections

Table B-1 Physical Drive IDs for a JBOD in a Single-Bus Configuration (Front View)

ID 0	ID 3	ID 8	ID 11
ID 1	ID 4	ID 9	ID 12
ID 2	ID 5	ID 10	ID 13

B.4 Cabling a Single-Bus JBOD with Two Host Connections

To connect a JBOD in a single-bus configuration to two hosts, connect the following ports:

- Connect the two lower JBOD input ports with the SCSI jumper cable.
- Connect each upper JBOD output port to a host server with a SCSI cable.

Caution – Before you disconnect a cable from the array, the host bus on that cable must be inactive.

Caution – Physical drive IDs are set based on the cabling on the array when it is powered up. If you are switching from single-bus mode to split-bus mode or from split-bus mode to single-bus mode, the physical drive IDs change after you power off, change the cabling, and then power on. If you change physical drive IDs on the array, ensure that your application points to the correct IDs.

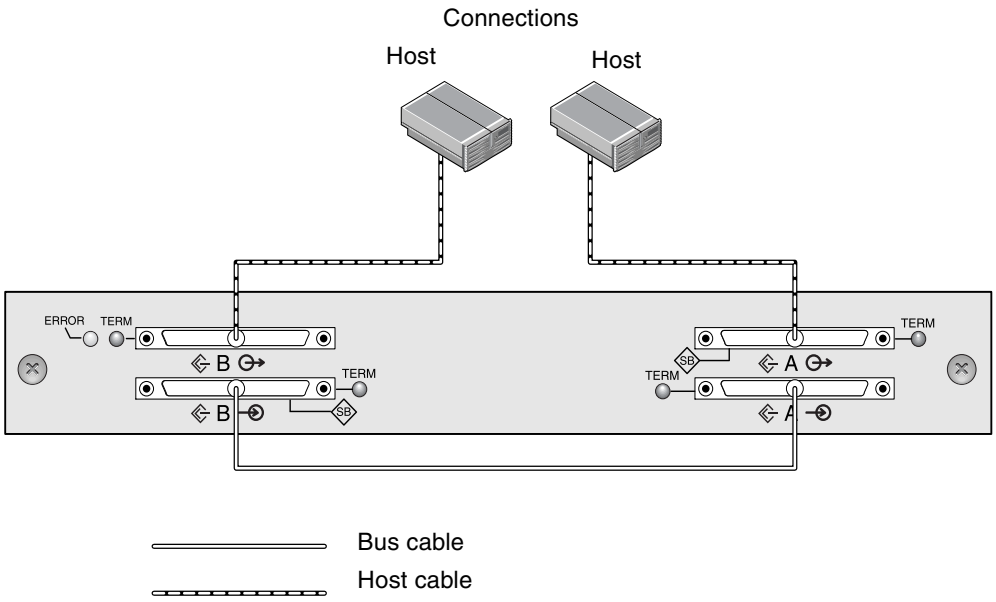

Figure B-2 A Single-Bus JBOD with Two Host Connections (Rear View)

The following table shows the default physical drive IDs for a 12-drive JBOD when you set up a single-bus configuration. The physical drive IDs are 0–13, with IDs 6 and 7 reserved for host HBA connections.

Table B-2 Physical Drive IDs for a JBOD in a Single-Bus Configuration (Front View)

ID 0	ID 3	ID 8	ID 11
ID 1	ID 4	ID 9	ID 12
ID 2	ID 5	ID 10	ID 13

B.5 Cabling a Split-Bus, Single-Initiator JBOD Configuration

There are two important features to note with the split-bus, single-initiator JBOD configuration:

- The lower input ports on the JBOD must be terminated with an HBA host connection or external terminator. The upper I/O SCSI connectors are auto-terminated.
- In a split-bus configuration, the physical drive ID numbers automatically change according to the cabling.

Single-initiator mode has only one host connection on a SCSI channel.

Figure B-3 shows a split-bus JBOD with two host connections using one host connection to each channel (single-initiator mode). In this example, the array can be connected to two hosts or to two ports on one host. For the single host configuration, this is an efficient way to provide mirroring capability for the single host.

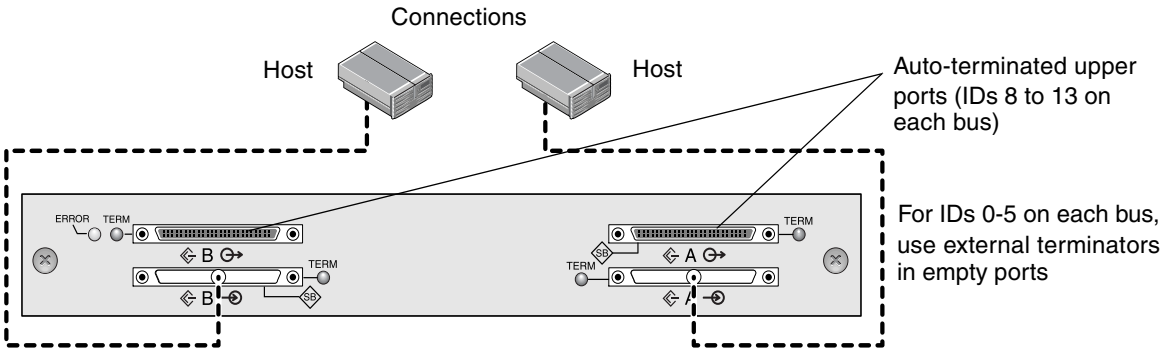

Figure B-3 Split-Bus Single-Initiator JBOD Configuration

In the previous split-bus, single-initiator mode example, the physical drive IDs are 8 to 13 on each channel. In the following table, A and B indicate the two host channels. The table shows the IDs assigned to each channel in the split-bus configuration.

Table B-3 Physical Drive IDs for a Split-Bus JBOD in Single-Initiator Mode

Channel A ID 8	Channel A ID 11	Channel B ID 8	Channel B ID 11
Channel A ID 9	Channel A ID 12	Channel B ID 9	Channel B ID 12
Channel A ID 10	Channel A ID 13	Channel B ID 10	Channel B ID 13

Note – If you want to have IDs of 0 to 5 and plan to add host connections to the upper two ports later, you can put external terminators into the upper two ports and preserve the IDs 0 to 5 for the life of the JBOD. For more information, refer to the *SANnet II Family FRU Installation Guide*.

B.5.1 Connecting a Split-Bus JBOD to One Host

To connect a split-bus JBOD, perform the following steps.

1. Stop any I/O on the host bus that will have a cable installed on the bus.
2. Connect each JBOD port to a host.

Caution – The lower input ports of the JBOD must have a host connection or external terminator to maintain SCSI bus integrity.

Caution – Before you disconnect a cable from the array, the host bus on that cable must be inactive.

Caution – Physical drive IDs are set based on the cabling on the array when it is powered up. If you are switching from single-bus mode to split-bus mode or from split-bus mode to single-bus mode, the physical drive IDs change after you power off, change the cabling, and then power on. If you change physical drive IDs on the array, ensure that your application points to the correct IDs.

B.6 Cabling a Split-Bus, Multi-Initiator JBOD Configuration

There are two important features to note with the split-bus, multi-initiator JBOD configuration:

- The lower input ports on the JBOD must be terminated with an HBA host connection or external terminator. The upper I/O SCSI connectors are auto-terminated.
- In a split-bus configuration, the physical drive ID numbers automatically change according to the cabling.

Multi-initiator mode has more than one host connection on a SCSI channel.

Figure B-4 shows a multi-initiator, split-bus configuration where each host is connected to each host channel. This configuration is common for failover protection in a network cluster environment.

When you remove one or more host cables for maintenance purposes, insert an external terminator into each empty port to maintain the physical drive IDs for the active host connections.

Note – The I/O module is hot-serviceable, which means that you can replace it or change its cables while the array is powered on, but the SCSI host buses connected to the array must be inactive.

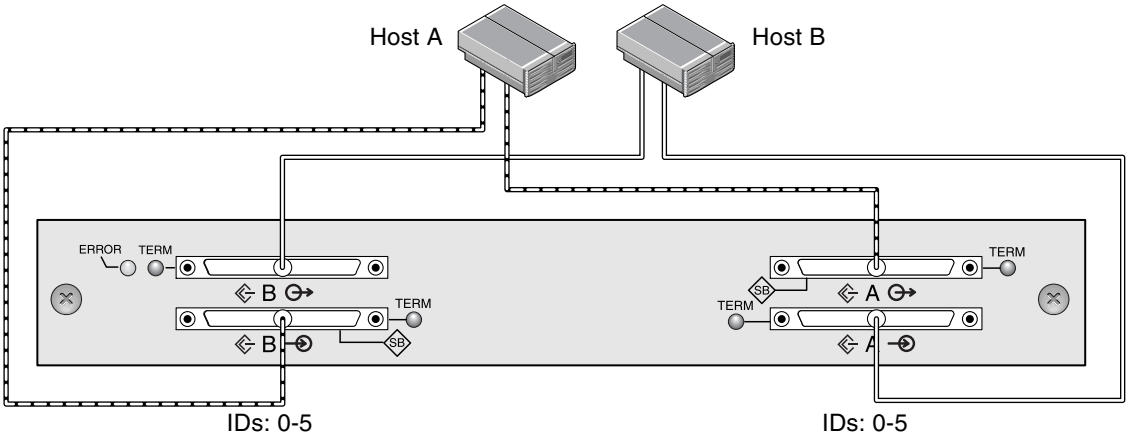

Figure B-4 Dual-Host, Split-Bus Multi-Initiator JBOD Configuration

In this configuration, the split-bus, multi-initiator mode creates physical drive IDs 0 to 5 on each channel as shown in Table B-4.

Table B-4 Physical Drive IDs for a Split-Bus JBOD in Multi-Initiator Mode

Channel A ID 0	Channel A ID 3	Channel B ID 0	Channel B ID 3
Channel A ID 1	Channel A ID 4	Channel B ID 1	Channel B ID 4
Channel A ID 2	Channel A ID 5	Channel B ID 2	Channel B ID 5

To connect a split-bus JBOD to two hosts, perform the following steps.

1. Stop any I/O on the host bus that will have a cable installed on the bus.
2. Connect each JBOD port to a host as shown in Figure B-4.

   The lower input ports of the JBOD must have a host connection or external terminator to maintain SCSI bus integrity.

Note – Before you disconnect a cable from the array, the host bus on that cable must be inactive.

Caution – Physical drive IDs are set based on the cabling on the array when it is powered up. If you are switching from single-bus mode to split-bus mode or from split-bus mode to single-bus mode, the physical drive IDs change after you power off, change the cabling, and then power on. If you change physical drive IDs on the array, ensure that your application points to the correct IDs.

B.7 Overview of Optional Software Monitoring and Management Tools

The following software management tools are optional for your array. The SANscape CD provides the related user guides.

- **SANscape.** Provides centralized storage configuration, maintenance, and monitoring functions. Refer to the *SANscape User's Guide* for inband setup procedures.
- **SANscape Alert.** Provides event monitoring and notification. Refer to the *SANscape Alert User's Guide* for more information.
- **SANscape Command-Line Interface (CLI).** A command-line interface utility that provides script-based management. Refer to the *SANscape CLI User's Guide* for CLI information.

For details on how to install SANscape, SANscape Alert, or SANscape CLI software, refer to the *SANscape Software Installation Guide*.

B.8 Monitoring with SANscape

SANscape supports the SANnet II U320 SCSI array. It also supports, to a limited degree, standalone SANnet II U320 SCSI JBOD arrays. Since standalone JBOD arrays do not have a RAID controller to manage the disks, this software support for JBODs is limited to the following functions:

- viewing component and alarm characteristics
- upgrading firmware on hard drives
- upgrading firmware on SCSI Accessed Fault-Tolerant Enclosure (SAF-TE) devices

Refer to the *SANscape User's Guide* for information about using these functions with JBOD arrays.

B.8.1 Enabling JBOD Support

Use JBOD support only when you have a SCSI array connected directly to a host. This enables you to monitor peripheral device conditions and events.

Note – Enabling JBOD support might impact I/O performance.

To monitor peripheral device conditions and events for a JBOD device from SANscape, you first need to enable JBOD support.

Note – Whenever you choose a command to perform administration or configuration activities in SANscape, if you are not logged in as **`ssadmin`** or **`ssconfig`**, you are prompted with a Log In dialog box to change your level of security.

---

1. Choose **View** → **Agent Options Management**.

   The **Agent Options Management** window is displayed.

2. Select the **Enable JBOD Support** checkbox.

3. To immediately display the JBOD array in the main window, you must probe for new inventory. Choose **View** → **View Server** and click **Probe**.

4. Click **OK**.

   The JBOD array is displayed in the main window.

   In a single-bus configuration, both ports of the JBOD array are connected to one HBA on the server, as shown in the following example:

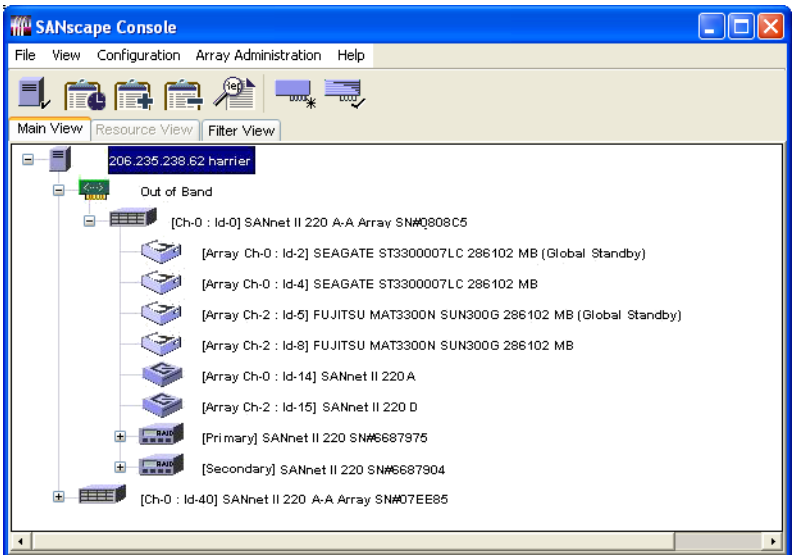

Figure B-5 Single-Bus Configuration

Note – In a split-bus configuration, each port is connected to its own HBA. A SAF-TE limitation prevents the main window from showing the drives connected to port A and port B. If each port is connected to a different server, the program can only monitor the JBOD from the server connected to port B.

B.8.2 Viewing Component and Alarm Characteristics

In SANscape, to view environmental component and alarm characteristics, use the View Enclosure window or, for some components, the main window.

You can also view environmental and drive components using the SANscape CLI **`show enclosure-status`** command. For details, refer to the *SANscape CLI User's Guide*.

Main Window

In the main window, device states are color-coded and symbol-coded so that it is easy to identify when a device is in a state that requires attention. The status is propagated along the device tree, enabling you to trace a failure down to the device level. See Table B-5 for device status details.

Table B-5 Device Status State

Color	Symbol	State
Purple	None	The group, server, or device is online.
White	None	The user has not logged into this server.
Yellow		One or more components of this group or server are not working properly, but the array is still functional.
Red		One or more components of this group or server are not working. For instance, a disk drive failure or an enclosure with a failed fan would warrant a critical state icon.
Gray		The group, server, or device is unresponsive.

To view the cause of a critical or degraded device status, review the event log. For details on the event log, refer to the *SANscape User's Guide*.

View Enclosure Window

The View Enclosure window displays the component and alarm characteristics for a JBOD device. The window displays the status for environmental components including the fan, power supply, and temperature sensor.

To view the environmental component and alarm characteristics of a SCSI array from the SANscape Console, perform the following steps.

1. Select the event-monitoring unit (EMU) icon .
2. Choose **View** → **View Enclosure**.

   To display FRU ID information, click **View FRU**.

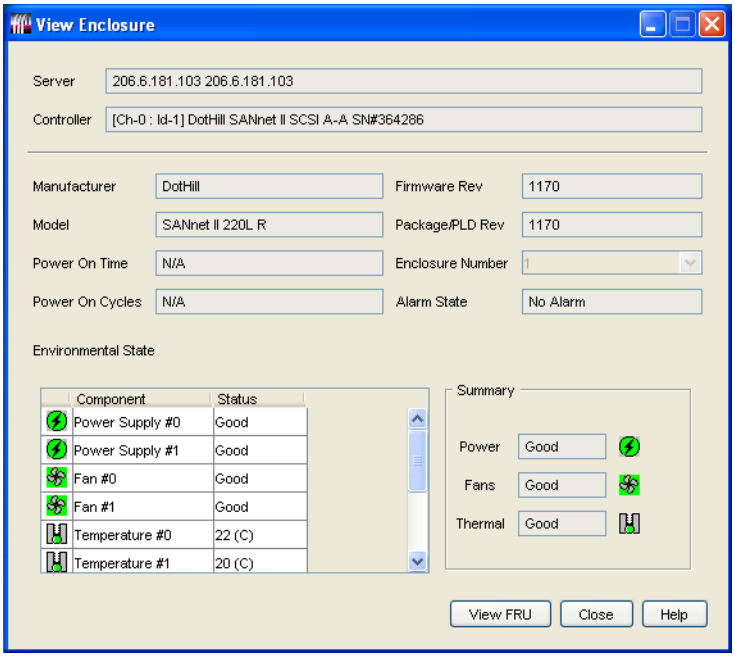

Figure B-6 View Enclosure Dialog Box

B.9 Event Messages from the SANscape Alert

SANscape Alert supports standalone JBOD arrays. However, triggered event notification is limited to environmental and hard drive failures.

B.10 Monitoring with the SANscape CLI

The SANscape CLI supports JBOD arrays. However, because JBOD arrays do not have a RAID controller to manage the disks, this command-line interface support is limited to the following commands:

- **`about`**
- **`download safte-firmware`**
- **`exit`**
- **`help`**
- **`quit`**
- **`select`**
- **`set led`**
- **`show access-mode`**
- **`show configuration`**
- **`show enclosure-status`**
- **`show frus`**
- **`show inquiry-data`**
- **`show led-status`**
- **`show safte-devices`**

- **version**

Refer to the *SANscape CLI User's Guide* for information about using these commands.

B.11 Downloading Firmware to Disk Drives in a JBOD

For instructions on how to download firmware to disk drives in a JBOD directly attached to a host, refer to the README file in the patch that contains the firmware.

B.12 Managing Disks in the SANnet II U320 JBOD Array

Use your standard host system disk management utilities for all disk management in a JBOD array, such as partitioning and formatting. Refer to your host system documentation for more information about disk management.

For maintenance and troubleshooting information, see "Troubleshooting SANnet II U320 SCSI JBOD Arrays" on page B-13.

B.13 Troubleshooting SANnet II U320 SCSI JBOD Arrays

This section describes troubleshooting procedures and error messages you can use to isolate configuration and hardware problems. For additional troubleshooting information, see Chapter 7.

B.13.1 Troubleshooting Configuration Issues

Follow this sequence of general steps to isolate software and configuration issues.

1. Look for storage-related messages in **/var/adm/messages** and identify any suspect JBOD arrays.
2. Check your SANscape console for alerts or messages.
3. Check revisions of software package, patches, and hardware.
4. Verify correct device file paths.
5. Check any related software, configuration, or startup files for recent changes.

B.13.2 Troubleshooting Hardware Issues

When a problem is not otherwise reproducible, suspect hardware might need to be replaced. Always make only one change at a time and carefully monitor results. When possible, it is best to restore the original hardware before replacing another part to eliminate the introduction of additional unknown problem sources.

After hardware replacement, a problem can usually be considered solved if it does not resurface during a period equal to twice its original frequency of occurrence. For example, if a problem was occurring once a week on average before a potential fix was made, running two weeks without seeing the problem again suggests a successful fix took place.

Troubleshooting hardware problems is usually accomplished by an FRU isolation sequence that uses the process of elimination. Set up a minimal configuration that shows the problem and then replace elements in this order, testing after each replacement until the problem is solved:

1. Replace the cables.
2. Replace the drives.
3. Replace the HBAs.

Often you can also find out what does cause a hardware problem by determining the elements that do not cause it. Start out by testing the smallest configuration that does work, and then keep adding components until a failure is detected.

To view error messages reported by JBODs or expansion units, use any of the following:

- Message log in the operating system
  - For Solaris, **`var/adm/messages`**
  - For Linux, **`var/log/message`**
  - For Microsoft Windows, use the **`event viewer`**
  - For HP-UX, **`/var/adm/syslog/syslog.log`**
  - For IBM AIX, see “Writing Events to a Log File for an IBM AIX Host” on page B-15.
- SANscape event log
- For expansion units, the SANscape CLI event log
- For expansion units, the RAID firmware event log

For more information about replacing the chassis, I/O module, or controller, refer to the *SANnet II Family FRU Installation Guide*.

Caution – Whenever you are troubleshooting your array or replacing components, there is an increased possibility of data loss. To prevent any possible data loss, back up user data to another storage device prior to replacing a disk drive, or any other component.

Before you begin troubleshooting a JBOD or expansion unit, check the cables that connect the host to the JBOD or expansion unit. Look for bent pins, loose wires, loose cable shields, loose cable casing, and any cables with 90 degree or more bends in them. If you find any of these conditions, replace the cable.

The Figure B-7 flowchart provides troubleshooting procedures specifically for JBODs and expansion units. For additional troubleshooting flowcharts, see "Power Supply and Fan Module" on page 7-8 and "Drive LEDs" on page 7-10.

B.13.2.1 Writing Events to a Log File for an IBM AIX Host

For an IBM AIX operating system, the event logs are not logged by default. You might need to change **/etc/syslog.conf** to enable it to write to a log file.

1. Modify **/etc/syslog.conf** to add the following line:

```
*.info /tmp/syslog rotate size 1000k
```

2. Make sure the file that is specified in the added line exists.

   If it does not exist, you must create it. For example, in the above configuration, you would create a file named **/tmp/syslog**.

3. Change to **/tmp/syslog** and restart the **syslog** by typing:

```
kill -HUP `cat /etc/syslog.pid`
```

B.13.3 Troubleshooting Flowcharts

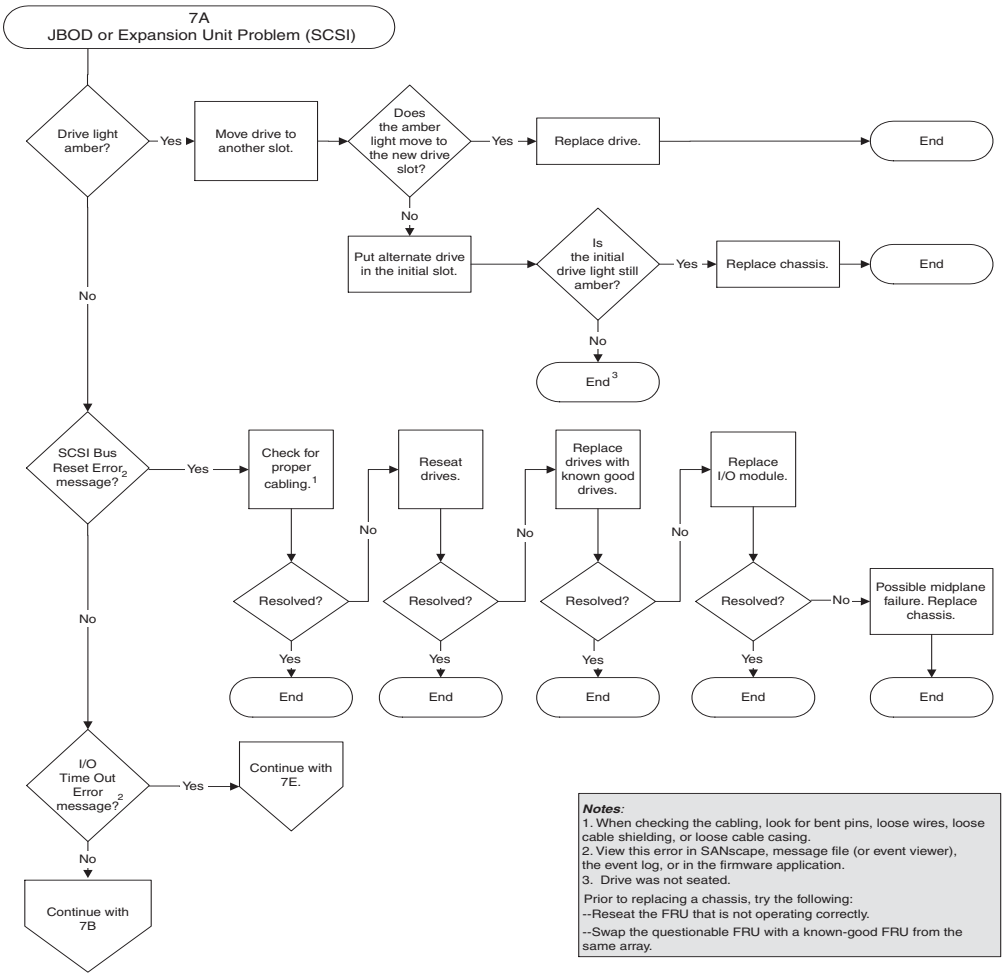

Figure B-7 JBOD or Expansion Unit Troubleshooting Flowchart, 1 of 4

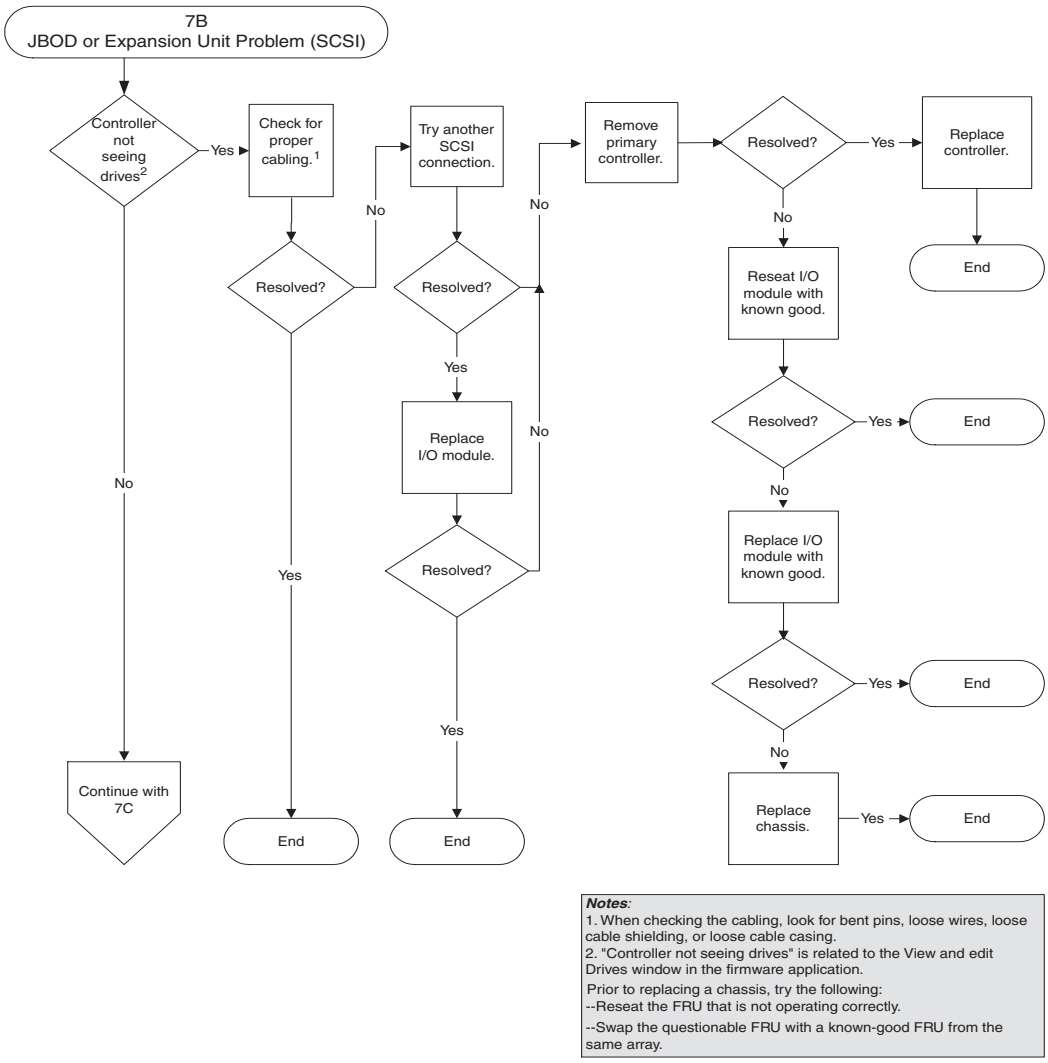

Figure B-8 JBOD or Expansion Unit Troubleshooting Flowchart, 2 of 4

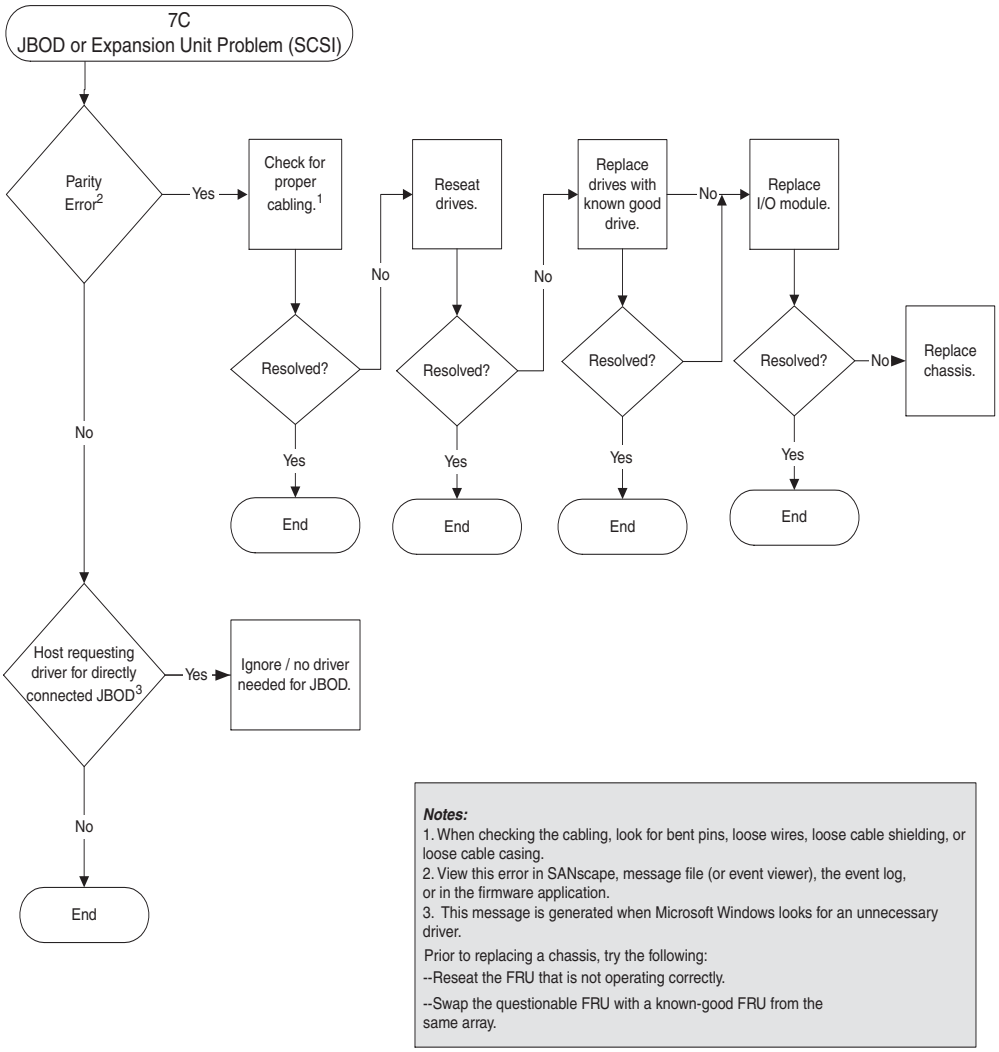

Figure B-9 JBOD or Expansion Unit Troubleshooting Flowchart, 3 of 4

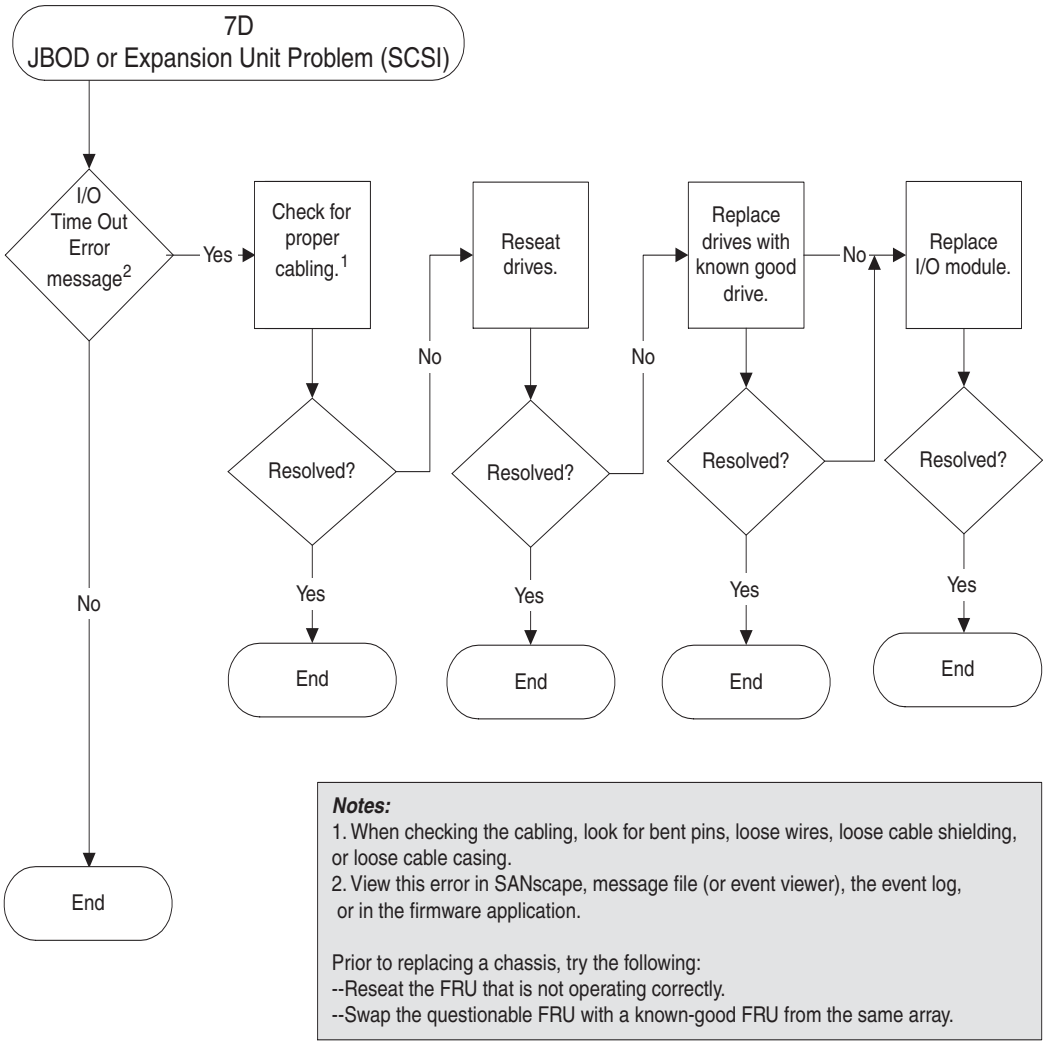

Figure B-10 JBOD or Expansion Unit Troubleshooting Flowchart, 4 of 4

APPENDIX C

Connector Pinouts

This appendix identifies the pinouts for each connector used in the SANnet II U320 SCSI array. Topics covered are:

- "SCSI Host or Drive Connector" on page C-1
- "RJ-45 Connector" on page C-3
- "DB9 COM Port Connector" on page C-4

C.1 SCSI Host or Drive Connector

Figure C-1 SCSI Host or Drive Connector

Table C-1 SCSI Connector Pin Descriptions

Pin	Description	Pin	Description
1	Data 12 +	35	Data 12 -
2	Data 13 +	36	Data 13 -
3	Data 14 +	37	Data 14 -
4	Data 15 +	38	Data 15 -
5	Parity 1 +	39	Parity 1 -
6	Data 0 +	40	Data 0 -
7	Data 1 +	41	Data 1 -
8	Data 2 +	42	Data 2 -
9	Data 3 +	43	Data 3 -
10	Data 4 +	44	Data 4 -
11	Data 5 +	45	Data 5 -
12	Data 6 +	46	Data 6 -
13	Data 7 +	47	Data 7 -
14	Parity 0 +	48	Parity 0 -
15	Ground	49	Ground
16	DIFF_SENS	50	Ground
17	TERM_PWR	51	TERM_PWR
18	TERM_PWR	52	TERM_PWR
19	N/C	53	N/C
20	Ground	54	Ground
21	ATN +	55	ATN -
22	Ground	56	Ground
23	BSY +	57	BSY -
24	ACK +	58	ACK -
25	RST +	59	RST -
26	MSG +	60	MSG -
27	SEL +	61	SEL -
28	C/D +	62	C/D -
29	REQ +	63	REQ -
30	I/O +	64	I/O -

Table C-1 SCSI Connector Pin Descriptions *(Continued)*

Pin	Description	Pin	Description
31	Data 8 +	65	Data 8 -
32	Data 9 +	66	Data 9 -
33	Data 10 +	67	Data 10 -
34	Data 11 +	68	Data 11 -

C.2 RJ-45 Connector

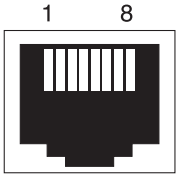

Figure C-2 Ethernet RJ-45 Socket 10Base-T

Table C-2 Ethernet RJ-45 Pin Descriptions

Pin No.	Description.	Color
1	TX +	White with orange
2	TX –	Orange
3	RX +	White with green
4	Not connected	Blue
5	Not connected	White with blue
6	RX –	Green
7	Not connected	White with brown
8	Not connected	Brown

C.3 DB9 COM Port Connector

The COM port is a female DB9 connector that requires a male DB9 null modem cable.

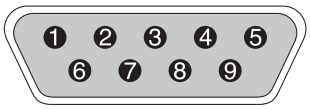

Figure C-3 RS-232 DB9 (EIA/TIA 574) View of the Male End

Table C-3 Pin Names

Pin No.	Name	Notes/Description
1	DCD	Data Carrier Detect
2	RD	Receive Data (a.k.a. RxD, Rx)
3	TD	Transmit Data (a.k.a. TxD, Tx)
4	DTR	Data Terminal Ready
5	GND	Ground
6	DSR	Data Set Ready
7	RTS	Request To Send
8	CTS	Clear To Send
9	RI	Ring Indicator

APPENDIX D

Configuring a Solaris Server

This appendix provides the following Solaris-specific information:

- "Accessing the Firmware Application On a Solaris Host" on page D-1
- "Editing the sd.conf File" on page D-2
- "Enabling a Solaris Host to Recognize New Devices and LUNs" on page D-4
- "Labeling a Volume" on page D-6
- "Making JBODs Visible to Solaris Hosts" on page D-9

D.1 Accessing the Firmware Application On a Solaris Host

This section provides information on redefining the baud rate for the serial port connection, and using the **`tip`** command to access the array remotely. For more information about the baud rate and other communication settings, see "Configuring the RS-232 Serial Port Connection" on page 4-28.

Note – You can also monitor and configure a RAID array over an IP network using the firmware application or the SANscape program after you assign an IP address to the array. For details, see "Setting Up Out-of-Band Management Over Ethernet" on page 4-30 or refer to the *SANscape User's Guide*.

You can specify the baud rate of 38,400 when you type the **`tip`** command.

1. Connect the RAID array COM port to a serial port of a Solaris workstation (see Figure D-1).

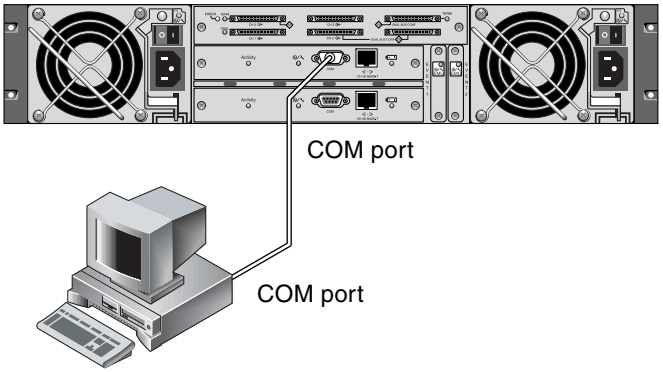

Figure D-1 RAID Array COM Port Connected Locally to the COM Port of a Workstation or Computer Terminal

2. Use the **tip** command to access the array locally.

```
# tip -38400 /dev/ttyn
```

where *n* is the COM port identifier. For instance, if you have connected the array to the COM port identified as **ttyb**, use this command:

```
# tip -38400 /dev/ttyb
```

3. Refresh your screen by holding down the Control key on your keyboard (this is abbreviated **Ctrl** on some keyboards) and pressing the letter **L** key on your keyboard.

D.2 Editing the sd.conf File

Edit the **/kernel/drv/sd.conf** file to add more targets and LUNs, up to 128 LUNs, which can be used in a single SANnet II U320 SCSI array. Then reboot the host.

You might want to allow a few extra LUNs for flexibility over the coming months, but generally most administrators minimize the number of unused LUNs, because each LUN causes a seven-second delay when you reboot the host.

Note – The maximum number of LUNs per target is 32.

Caution – After you edit **sd.conf**, you must reboot the host to enable the new LUN assignments.

The following example file sets up targets 1 and 3 with a total of 41 LUNs (LUNs 0 through 31 on target 0, and LUNs 0 through 8 on target 3). Default LUNs are listed first, followed by new LUNs.

```
# Copyright (c) 1992, by Dot Hill Systems Corp.
#
#ident"@(#)sd.conf1.998/01/11 SMI"

name="sd" class="scsi" class_prop="atapi"
target=0 lun=0;
.
.
name="sd" class="scsi"
target=15 lun=0;

#NEW LUNs have been appended to the default settings in the
file, starting here.

name="sd" class="scsi"
target=1 lun=1;

name="sd" class="scsi"
target=1 lun=2;

name="sd" class="scsi"
target=1 lun=3;

name="sd" class="scsi"
target=1 lun=4;

name="sd" class="scsi"
target=1 lun=5;

name="sd" class="scsi"
target=1 lun=6;
name="sd" class="scsi"
target=1 lun=7;
.
.
.
name="sd" class="scsi"
target=1 lun=31;
```

```
name="sd" class="scsi"
target=3 lun=1;

name="sd" class="scsi"
target=3 lun=2;

name="sd" class="scsi"
target=3 lun=3;

name="sd" class="scsi"
target=3 lun=4;

name="sd" class="scsi"
target=3 lun=5;

name="sd" class="scsi"
target=3 lun=6;

name="sd" class="scsi"
target=3 lun=7;

name="sd" class="scsi"
target=3 lun=8;


# END additional lun entries
```

D.3 Enabling a Solaris Host to Recognize New Devices and LUNs

By default, a Solaris host is configured for one host LUN per SCSI target, which is not enough LUNs for a SANnet II U320 SCSI array. You must edit the appropriate onboard HBA driver configuration file to add more targets and LUNs, up to 32 LUNs per logical drive, and a maximum of 128 LUNs per SANnet II U320 SCSI array.

Driver configuration files include **`/kernel/drv/qus.conf`** and **`/kernel/drv/glm.conf`**. Edit the file which is appropriate for your HBA.

Caution – Do not edit the /etc/system file to accomplish the same purpose. While this can have the desired effect, it can also cause interference with other storage devices attached to the same host.

Note – Refer to the **driver.conf**(4) man page for information and syntax to use. Refer to your HBA release notes and your HBA installation guide for specific configuration information.

Once you have edited the configuration file, reboot the host for the changes to take effect.

1. Edit the **/kernel/drv/qus.conf** or **/kernel/drv/glm.conf** file (whichever is appropriate to your HBA) to add more targets and LUNs (up to 32 LUNs per logical drive, and a maximum of 128 LUNs per SANnet II U320 array).

Note – If the file does not exist, create it using the format in the example below. Allow five blank spaces between “Dot Hill” and “SANnet II U320” on the first line.

In an environment where only SANnet II U320 SCSI devices are used, an example of text to add to **/kernel/drv/qus.conf** or **/kernel/drv/glm.conf** is:

```
device-type-scsi-options-list = “Dot Hill   SANnet II 220”,
“SANnet II 220-scsi-options”;
SANnet II 220-scsi-options = 0x43ff8;
```

In an environment where both SANnet II 200 and SANnet II U320 SCSI devices are used, an example of text to add to **/kernel/drv/qus.conf** or **/kernel/drv/glm.conf** is:

```
device-type-scsi-options-list =
          "SANnet II 200 SCSI", "SE33x0-scsi-options",
          "SANnet II 220 SCSI", "SE33x0-scsi-options";
      SE33x0-scsi-options = 0x43ff8;
```

For more information about multiple device types, refer to the **scsi_get_device_type_scsi_options(9F) man page**.

2. Reboot the host to implement the file changes.

   The Solaris 8 OS requires a reconfiguration reboot to create device files and implement **sd.conf** changes but you do not need a reconfiguration reboot for the Solaris 9 or 10 OS.

```
reboot -- -r
```

   For the Solaris 9 or 10 OS, use the following commands to create device files after you have edited **sd.conf**. No reboot is necessary with this command:

```
update_drv -f sd
devfsadm
```

   The new LUNs are displayed when you perform the **format** command.

3. To display the new LUNs, perform the following command:

```
format
```

D.4 Labeling a Volume

For the Solaris OS to recognize a volume, it must be labeled with the **format** command. Whenever you create a volume, label it using the following procedure. For more information on the **format** command, see the **format**(1M) man page.

To label a volume, perform the following steps.

1. On the data host, type **format** at the root prompt.
2. Specify the disk number when prompted.

   In this example, the array is shown as disk number 2. You can identify it by the **DotHill SANnet II** label.

```
format
Searching for disks...done


AVAILABLE DISK SELECTIONS:
       0. c0t2d0 <DotHill-SANnetII-0220 cyl 34901 alt 2 hd 128 sec 256>
          /pci@70,2000/pci@2/DotH,qlc@4/fp@0,0/ssd@w50020f230000b230,0
       1. c0t2d1 <DotHill-SANnetII-0220 cyl 34901 alt 2 hd 128 sec 256>
          /pci@70,2000/pci@2/qlc@4/fp@0,0/ssd@w50020f230000b230,1
       2. c0t4d0 <DotHill-SANnetII-0220 cyl 34901 alt 2 hd 128 sec 256>
          /pci@70,2000/pci@2/,qlc@4/fp@0,0/ssd@w50020f230000b37f,0
       3. c0t4d1 <DotHill-SANnetII-0220 cyl 34901 alt 2 hd 128 sec 256>
          /pci@70,2000/pci@2/,qlc@4/fp@0,0/ssd@w50020f230000b37f,1
       4. c0t6d0 <DotHill-SANnetII-0220 cyl 34901 alt 2 hd 128 sec 256>
          /pci@70,2000/pci@2/,qlc@4/fp@0,0/ssd@w50020f230000b28e,0
       5. c0t6d1 <DotHill-SANnetII-0220 cyl 34901 alt 2 hd 128 sec 256>
          /pci@70,2000/pci@2/,qlc@4/fp@0,0/ssd@w50020f230000b28e,1
       6. c0t8d0 <DotHill-SANnetII-0220 cyl 34901 alt 2 hd 128 sec 256>
          /pci@70,2000/pci@2/,qlc@4/fp@0,0/ssd@w50020f230000b719,0
       7. c0t8d1 <DotHill-SANnetII-0220 cyl 34901 alt 2 hd 128 sec 256>
          /pci@70,2000/pci@2/,qlc@4/fp@0,0/ssd@w50020f230000b719,1
       8. c1t1d0 <DotHill-SANnetII-0220 cyl 34901 alt 2 hd 128 sec 256>
          /pci@71,2000/pci@2/,qlc@4/fp@0,0/ssd@w50020f230000af55,0
       9. c1t1d1 <DotHill-SANnetII-0220 cyl 34901 alt 2 hd 128 sec 256>
          /pci@71,2000/pci@2/,qlc@4/fp@0,0/ssd@w50020f230000af55,1
      10. c1t3d0 <DotHill-SANnetII-0220 cyl 34901 alt 2 hd 128 sec 256>
          /pci@71,2000/pci@2/,qlc@4/fp@0,0/ssd@w50020f230000afdf,0
      11. c1t3d1 <DotHill-SANnetII-0220 cyl 34901 alt 2 hd 128 sec 256>
          /pci@71,2000/pci@2/,qlc@4/fp@0,0/ssd@w50020f230000afdf,1
      12. c1t5d0 <DotHill-SANnetII-0220 cyl 34901 alt 2 hd 128 sec 256>
          /pci@71,2000/pci@2/,qlc@4/fp@0,0/ssd@w50020f230000b723,0
       13. c3t2d0 <DotHill18G cyl 7506 alt 2 hd 19 sec 248>
           /sbus@7d,0/,fas@1,8800000/sd@2,0
       14. c3t3d0 <DotHill18G cyl 7506 alt 2 hd 19 sec 248>
           /sbus@7d,0/,fas@1,8800000/sd@3,0
Specify disk (enter its number): 2
selecting c0t4d0
[disk formatted]
```

If the volume had not been labeled previously using the **format** command, the following confirmation prompt is displayed:

```
Disk not labeled. Label it now?
```

3. (Optional) If you see this confirmation prompt, type **y** and press **Return** to display the FORMAT MENU.

4. Type **type** to select a drive type:

```
FORMAT MENU:
        disk       - select a disk
        type       - select (define) a disk type
        partition  - select (define) a partition table
        current    - describe the current disk
        format     - format and analyze the disk
        repair     - repair a defective sector
        label      - write label to the disk
        analyze    - surface analysis
        defect     - defect list management
        backup     - search for backup labels
        verify     - read and display labels
        save       - save new disk/partition definitions
        inquiry    - show vendor, product and revision
        volname    - set 8-character volume name
        !<cmd>     - execute <cmd>, then return0
        quit
format> type
```

5. Type **0** to choose the **Auto configure** option.

   Select the **Auto configure** option regardless of which drive types are displayed by the **type** option.

```
AVAILABLE DRIVE TYPES:
        0. Auto configure
        1. Quantum ProDrive 80S
        2. Quantum ProDrive 105S
        3. CDC Wren IV 94171-344
        4. DotHill0104
        5. DotHill0207
        6. DotHill0327
        7. DotHill0340
        8. DotHill0424
        9. DotHill0535
        10. DotHill0669
        11. DotHill1.0G
        12. DotHill1.05
        13. DotHill1.3G
        14. DotHill2.1G
        15. DotHill2.9G
        16. DotHill-SANnet II 220-0100
        17. other
Specify disk type (enter its number)[16]: 0
c1t1d0: configured with capacity of 33.34GB
<DotHill-SANnet II 220-0200 cyl 34145 alt 2 hd 16 sec 128>
selecting c1t1d0
[disk formatted]
```

6. Type **label** and answer **y** when prompted to continue.

```
format> label
Ready to label disk, continue? y
```

Note – For further information on partitioning, see the Solaris **format**(1M) man page.

D.5 Making JBODs Visible to Solaris Hosts

If the JBOD cabling is correct and the drives are still not visible, run the **devfsadm** utility to rescan the drives. The new disks can be seen when you perform the **format** command.

If the drives are still not visible, reboot the host(s) with the **reboot -- -r c**ommand so that the drives are visible to the host.

APPENDIX E

Configuring a Windows 200x Server or Windows 200x Advanced Server

This appendix provides platform-specific host installation and configuration information to use when you connect a SANnet II U320 SCSI array to a host running the Windows 2000 Server, Windows 2000 Advanced Server, Windows 2003 Server, or Windows 2003 Advanced Server OS. For convenience, these platforms are referred to collectively in this document as "Windows 200x server."

The information in this appendix supplements the cabling steps presented in Chapter 4, and covers the following steps:

- "Setting Up the Serial Port Connection" on page E-1
- "Accessing the Firmware Application From a Windows 200x Server" on page E-3
- "Enabling a Windows 200x Server to Recognize New Devices and LUNs" on page E-4

E.1 Setting Up the Serial Port Connection

The RAID controller can be configured by means of a host system running a VT100 terminal emulation program or by a Windows terminal emulation program such as HyperTerminal.

Note – You can also monitor and configure a RAID array over an IP network using the firmware application or the SANscape program after you assign an IP address to the array. For details, see "Setting Up Out-of-Band Management Over Ethernet" on page 4-30 or refer to the *SANscape User's Guide.*

---

1. Use a null modem serial cable to connect the COM port of the RAID array to an unused serial port on your host system.

   A null modem cable has serial signals swapped for connecting to a standard serial interface.

Note – A DB9-to-DB25 serial cable adapter is included in your package contents to connect the serial cable to a DB25 serial port on your host if you do not have a DB9 serial port.

2. Power up the array.
3. On the Windows 200x server, choose **Start** → **Programs** → **Accessories** → **Communications** → **HyperTerminal**.
4. Type a name and choose an icon for the connection.
5. In the **Connect To** window, choose the COM port from the **Connect Using**: drop-down menu that is connected to the array.

6. Click **OK**.
7. In the **Properties** window, set the serial port parameters using the drop-down menus.
   - 38400 baud
   - 8 bit
   - 1 stop bit
   - Parity: None
   - Flow control: None

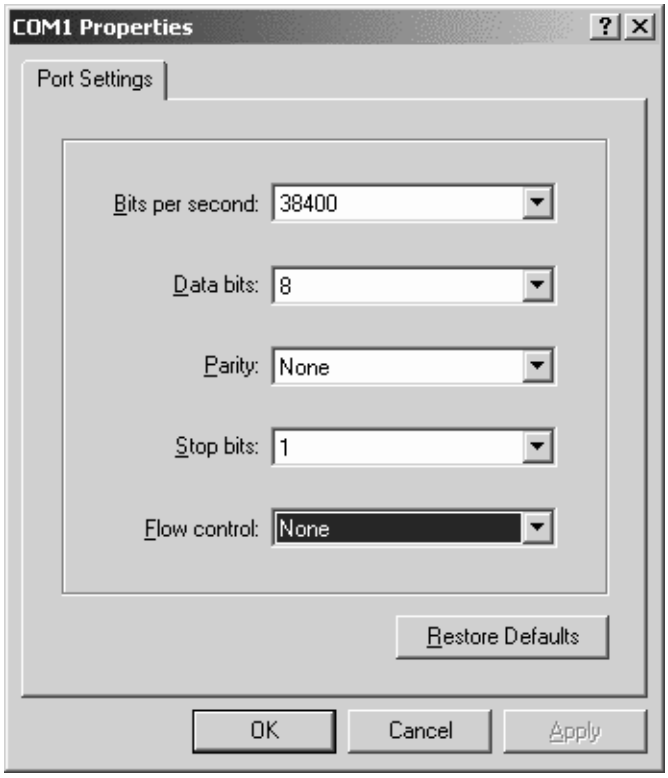

8. To save the connection and its settings, choose **File → Save**.

   The connection filename is *connection_name* where *connection_nam*e is the name you gave this HyperTerminal connection when you created it.

9. To make a connection shortcut on your desktop, choose **Start → Find → For Files or Folders**. Enter the *connection_nam*e and click the Search Now button. Highlight and right-click on the filename in the **Search Results** window, select **Create Shortcut**, and click **Yes**.

   You are now ready to configure your array.

E.2 Accessing the Firmware Application From a Windows 200x Server

To access the array through a serial port, use the HyperTerminal connection you configured in “Setting Up the Serial Port Connection” on page E-1 or install a VT100 terminal emulation program and use the parameters described there.

To access the array through an Ethernet connection, follow the procedures in "Setting Up Out-of-Band Management Over Ethernet" on page 4-30. To access the command prompt described there from a Windows 200x Server or Windows 200x Advanced Server, perform this step:

- **Choose Programs → Accessories → Command Prompt.**

E.3 Enabling a Windows 200x Server to Recognize New Devices and LUNs

Before beginning this procedure, make sure that you are using a supported SCSI host bus adapter (HBA) such as an Adaptec 39160. Refer to the release notes for your array for current information about which HBAs are supported.

Also make sure that you are using a supported driver for your HBA. For the Adaptec 39160, use FMS V4.0a or later.

1. Boot your system and verify that the host bus adapter (HBA) basic input/output system (BIOS) recognizes your new SCSI device(s).

Note – While your system is starting up, you should see your new SCSI device(s).

---

2. If a **Found New Hardware Wizard** is displayed, click **Cancel**.

   You are now ready to format your new device(s).

3. Open the **Disk Management** folder.

   a. Right-click the **My Computer** icon to display a pop-up menu.

   b. Select **Manage**.

   c. Select the **Disk Management** folder.

   d. If a **Write Signature and Upgrade Disk Wizard** is displayed, click **Cancel**.

      A **Connecting to Logical Disk Manager Server** status message is displayed.

4. Select your new device when it is displayed.

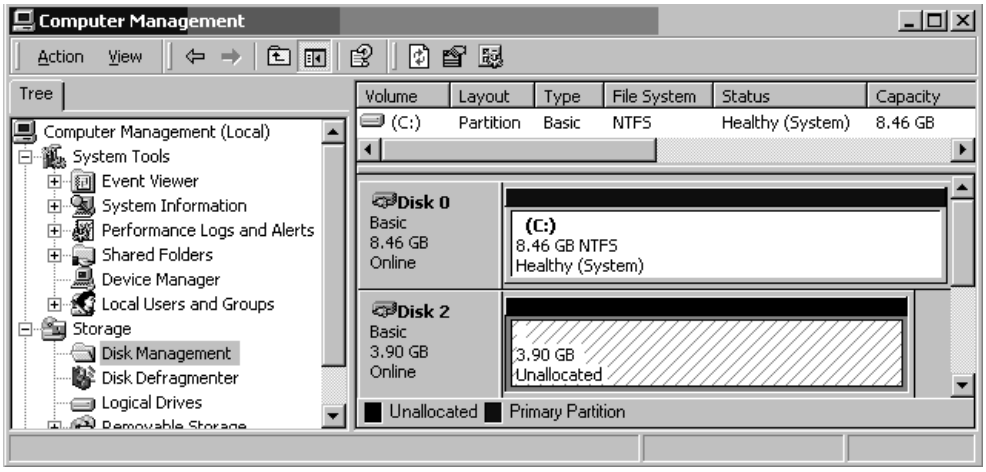

5. Right-click in the **Unallocated partition of your device** to display a pop-up menu.
6. Select **Create Partition** from the pop-up menu.
   A **Create Partition Wizard** is displayed.

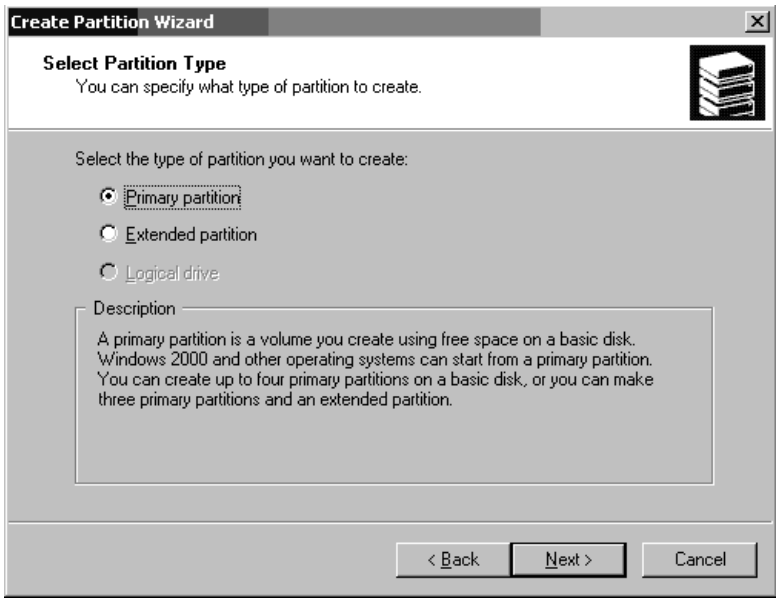

7. Click **Next**.
8. Select **Primary partition** and click **Next**.

9. Specify the amount of disk space to use or accept the default value, and click **Next**.

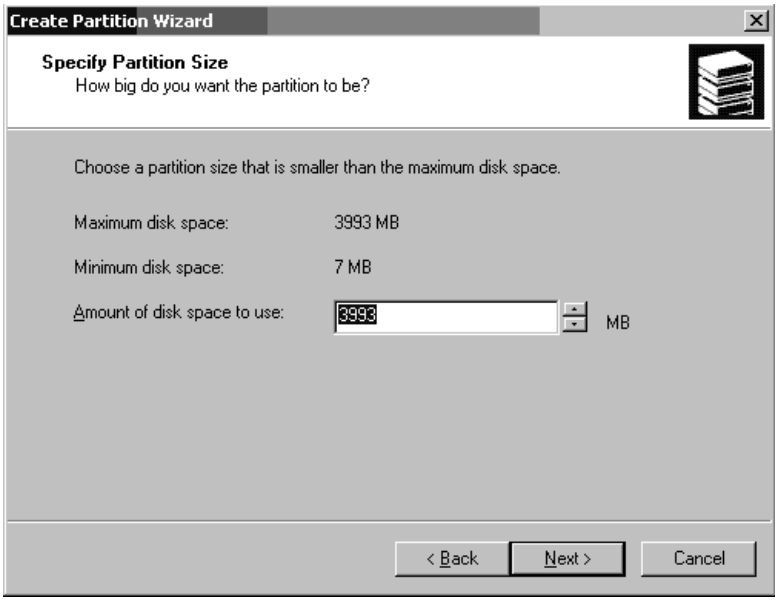

10. Assign a drive letter if desired and click **Next**.
11. Select **Format this partition with the following settings**.
    a. Specify **NTFS** as the File system to use.
    b. Make sure the **Perform a Quick Format** checkbox is checked.

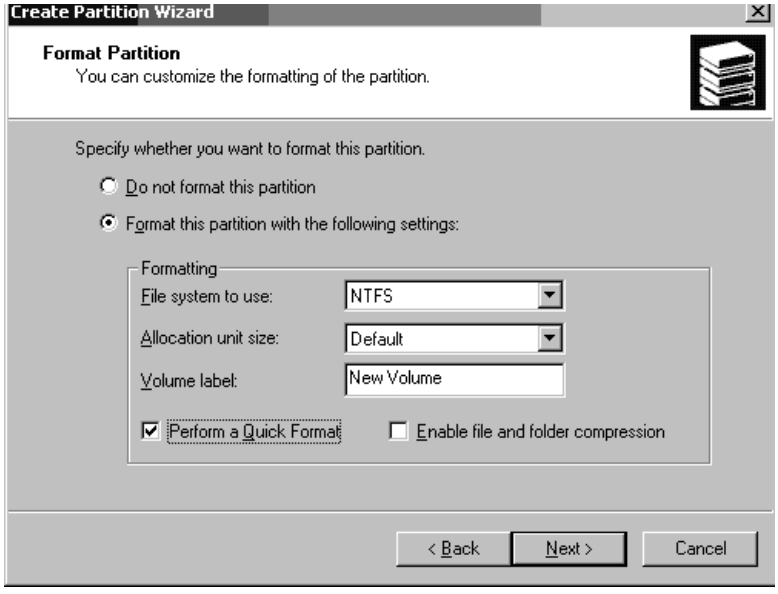

c. Click **Next**.

A confirmation dialog displays the settings you have specified.

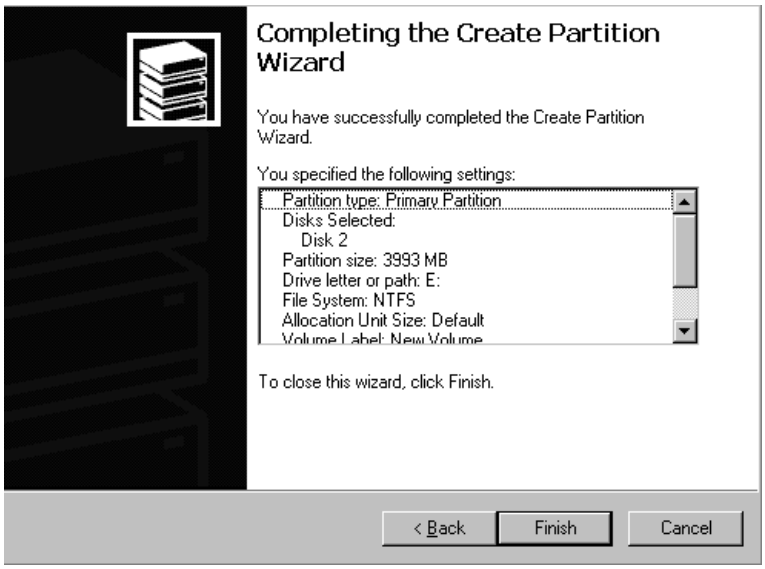

12. Click **Finish**.

    The new partition is formatted and the formatted partition is identified as NTFS in the **Computer Management** window.

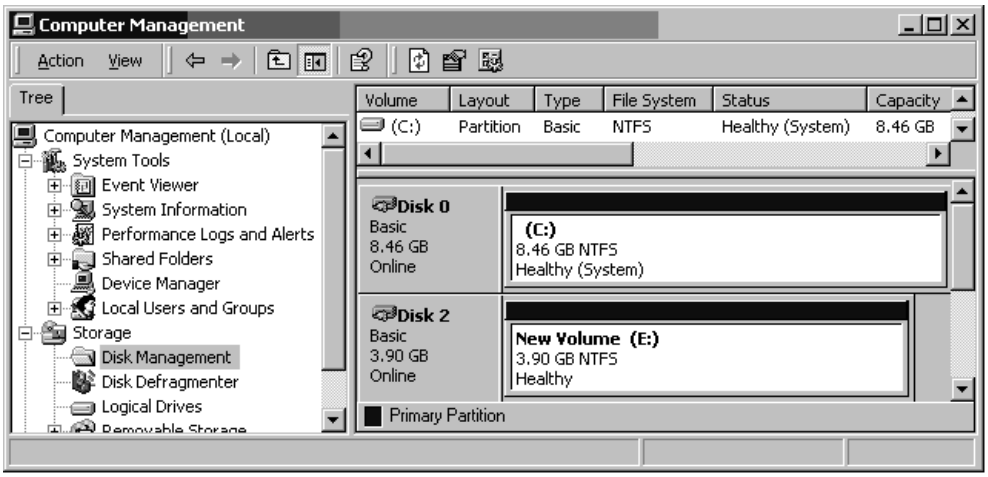

13. Repeat these steps for any other new partitions and devices you want to format.

APPENDIX F

Configuring a Linux Server

This appendix provides LUN setup information needed when you connect a SANnet II U320 SCSI array to a Linux OS. For a list of supported adapters, refer to the release notes.

This information supplements the configuration steps presented in Chapter 4 and covers the following steps:

- "Checking the Adapter BIOS" on page F-1
- "Multiple LUN Linux Configuration" on page F-2
- "Making an ext3 Filesystem for Linux" on page F-3
- "Creating a Filesystem" on page F-4
- "Creating a Mount Point and Mounting the Filesystem Manually" on page F-4
- "Mounting the Filesystem Automatically" on page F-4

F.1 Checking the Adapter BIOS

When booting the server, watch for the host bus adapter (HBA) card BIOS message line to show up and then press the proper sequence of keys in order to get into the HBA BIOS: Key strokes for SCSI Adaptec cards = **<Ctrl><A>.**

The key strokes are listed on the screen when the adapter is initializing. After you enter the Adaptec HBA BIOS with **<Ctrl><A>**, perform the following steps.

1. Highlight **Configure/View Host Adapter Settings** and press **Return**.
2. Go to **Advanced Configuration Options** and press **Return**.
3. Go to **Host Adapter BIOS** and press **Return**.
   a. Select **disabled:scan bus** if this is not going to be a bootable device.
   b. If it is going to be bootable device, select the default **Enabled**. The ***** represents the default setting.
4. Press **Esc** until you get back to the main **options** screen where **Configure/View Host Adapter Settings** was located.

5. Highlight **SCSI Disk Utilities** and press **Return**.

   The BIOS scans the SCSI card for any SCSI devices attached to the HBA.

   The HBA's SCSI ID is displayed, as well as any other SCSI devices attached to the HBA. If you see only the HBA's SCSI ID, then something is not correct with the configuration on the SCSI attached device, or the cable between the HBA and the SCSI device is bad or not attached.

6. If you are satisfied with the configuration, press **Esc.**

   A confirmation prompt asks you if you want to exit the utility.

7. Click **Yes** and press **Return**.

   A confirmation prompt is displayed:

```
Please press any key to reboot.
```

8. Press any key.

   The server reboots.

   Repeat this procedure for every HBA that is going to be attached to the SANnet II U320 SCSI array.

F.2 Multiple LUN Linux Configuration

By default, the Linux kernel does not support multiple LUNs. To support multiple LUNs, modify the kernel with the following steps.

1. Log in as root, or **su** to root if you are logged in as a user.
2. Add this line to the end of **/etc/modules.conf** file and save the file.

```
options scsi_mod max_scsi_luns=255
```

3. At the system prompt, enter this command and press **Return**:

```
mkinitrd -f /boot/initrd-2.4.9-e.3.img 2.4.9-e.3
```

   The 2.4.9-e.3 entries refer to the current kernel. To find out your current kernel, type **uname -r** and substitute your kernel information in place of the 2.4.9-e.3 entries.

4. Reboot the server.

   To halt the server completely, use **shutdown -h**. To reboot automatically after the shutdown is complete, use **shutdown -r**.

F.3 Making an ext3 Filesystem for Linux

The following procedure to label and partition drives using **fdisk** applies to an ext3 filesystem. To discover which disk you want to label, you must find out what device it is.

1. To list all devices and their paths, start a terminal session and type:

```
# fdisk -l
```

   Record the device name(s) and path(s) which you plan to use.

2. Then type:

```
# fdisk /dev/sd(x) x= a,b,c,...
```

   A banner appears for the specified array device. The last statement displays a prompt Command (m or help):

3. Type **m** or **help**.

4. On the displayed menu, select **n** for the **Command action** and press **Return**.

   Two choices are displayed:

   e extended

   p primary partition (1-4)

   Only four primary partitions are allowed per array. All additional partitions must be added as extended LUNs under one primary partition. Only one primary partition is allowed to have extended LUNs.

5. For the first partition, choose **p**.

   When several options appear, keep the defaults. You can reconfigure this after you understand the process and see what it looks like. Add additional primary partitions and extended partitions as needed.

6. After you have completed accepting the defaults and are back at the **Command (m or help):** screen, press **w** to save the configuration and exit **fdisk**.

   Your partition is ready for a filesystem now.

F.4 Creating a Filesystem

1. Log in as **root,** or **su** to root if you are logged in as a user.
2. Take the device that you ran **fdisk** on and run the following command to create an ext3 filesystem:

```
# mkfs -t ext3 /dev/sdb(x)
```

where **x** = the partition that you want to have become a filesystem. Replace **x** with **1** since there is only one partition.

F.5 Creating a Mount Point and Mounting the Filesystem Manually

1. Go to the directory where you want to create a directory to use as the mount point.
2. Type this command:

```
# mkdir name
```

3. To mount your filesystem, type the following:

```
# mount /dev/sdb(x) /directory path
```

where x = 1 for this partition.

F.6 Mounting the Filesystem Automatically

You can label the partition so that it can be entered in the **fstab** file for mounting the partition automatically at bootup. The use of the label and **fstab** file is a faster operation than mounting the filesystem manually with a device path.

1. Type the following command to add a label to the partition:

```
# e2label /dev/sdb(x) /directory_path
```

where x = 1 for this partition and the directory path is the directory that was created and where it is located.

2. Edit the **/etc/fstab** file and add the following line:

```
# LABEL=/mount/point /mount/point ext3 1 2
```

3. Save the file.
4. To check to see if **fstab** was set up correctly, type:

```
# mount -a
```

   If the mount point and the **fstab** file are correctly set up, no errors appear.

5. To verify it is mounted and list all mounted filesystems, type:

```
# df -k
```

6. To unmount the filesystem, type:

```
# umount /filesystem_name
```

APPENDIX G

Configuring an IBM Server Running the AIX Operating System

This appendix provides access information and LUN setup information needed when you connect a SANnet II U320 SCSI array to an IBM server running the IBM AIX OS.

For a list of supported HBA adapters, refer to the release notes for your array.

The information in this appendix supplements the configuration steps presented in Chapter 4 and covers the following topics:

- "Setting Up a Serial Port Connection" on page G-1
- "Accessing the Firmware Application From an IBM Server Running AIX" on page G-2
- "Identifying the Device On Which To Create a Logical Volume" on page G-4
- "Using SMIT to Enable an AIX Host to Recognize New LUNs" on page G-4
- "Creating a Volume Group" on page G-5
- "Creating a Logical Volume" on page G-6
- "Creating a File System" on page G-6
- "Mounting the New File System" on page G-7
- "Verifying That the New File System Is Mounted" on page G-7

G.1 Setting Up a Serial Port Connection

The RAID controller can be configured by means of a host system running a VT1000 terminal emulation program or by a Windows terminal emulation program such as HyperTerminal.

Note – You can also monitor and configure a RAID array over an IP network using the firmware application or the SANscape program after you assign an IP address to the array. For details, see "Setting Up Out-of-Band Management Over Ethernet" on page 4-30 or refer to the *SANscape User's Guide.*

If you are planning to access your array over an IP network or through a terminal server and only want to connect through a serial port for the initial configuration of the array, it is not necessary to configure a serial port connection from your IBM host. For convenience, installers frequently perform the initial array configuration using a serial port on a portable computer.

If you want to use a Windows portable computer for this initial array configuration, see "Setting Up the Serial Port Connection" on page E-1 for Windows 2000 systems.

If you prefer to connect through a serial port on your IBM server, consult the hardware information for your IBM host system to locate a serial port you can use for configuring the SANnet II U320 SCSI array. The system documentation also tells you what device file to use in accessing that port. For more information about the baud rate and other communication settings, see "Configuring the RS-232 Serial Port Connection" on page 4-28.

Note – The next section also shows how to use the Kermit utility to set these parameters.

Once you have configured your serial port, follow the instructions in the next section.

G.2 Accessing the Firmware Application From an IBM Server Running AIX

The RAID controller can be configured from the host system by means of terminal emulators such as Kermit.

To access the controller firmware through the serial port, perform the following steps.

1. Connect the serial null-modem cable to the disk array and to the serial port on the IBM server.

Note – A DB9-to-DB25 serial cable adapter is shipped with the disk array to connect the serial cable to a DB25 serial port on your host if you do not have a DB9 serial port.

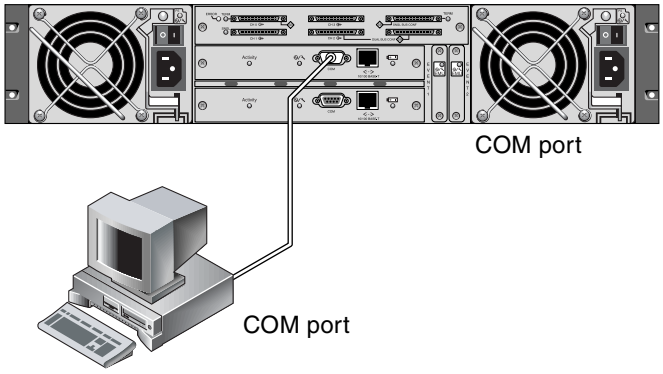

Figure G-1 RAID Array COM Port Connected Locally to the Serial Port of a Host System

2. Power on the array.
3. After the array is powered up, power on the IBM server and log in as **root**, or **su** to **root** if you are currently logged in as a user.
4. Start the Kermit program and set the parameters as shown in the following example. Use the device-specific name for the serial port you are using. In the example, the serial port being configured is **/dev/tty0p1**.

```
# kermit
Executing /usr/share/lib/kermit/ckermit.ini for UNIX...
Good Morning!
C-Kermit 7.0.197, 8 Feb 2000, for HP-UX 11.00
 Copyright (C) 1985, 2000,
  Trustees of Columbia University in the City of New York.
Type ? or HELP for help.
(/) C-Kermit>set line /dev/tty0p1
(/) C-Kermit>set baud 38400
/dev/tty0p1, 38400 bps
(/) C-Kermit>set term byte 8
(/) C-Kermit>set carrier-watch off
(/) C-Kermit>C
Connecting to /dev/tty0p1, speed 38400.
The escape character is Ctrl-\ (ASCII 28, FS)
Type the escape character followed by C to get back,
or followed by ? to see other options.
----------------------------------------------------
```

Note – To return to the Kermit prompt type **Ctrl ** and then **C**. To exit Kermit, first return to the Kermit prompt and then type **exit**.

G.3 Identifying the Device On Which To Create a Logical Volume

1. Display all the defined disk devices on your system.

```
# lsdev -Cc disk
```

   A list of defined disk devices is displayed along with information about those devices.

2. Identify the name of the device on which you want to create a logical volume; for example, **hdisk7.**

3. Verify that the disk you've identified is the one you want.

```
# lscfg -v -l devicename
```

   Detailed information about the device you specified is displayed.

4. Examine the manufacturer information and model information to make sure you have specified the device you want.

G.4 Using SMIT to Enable an AIX Host to Recognize New LUNs

The simplest way to configure your IBM AIX host to use your array is to use System Management Interface Tool (SMIT). SMIT can be used with a graphical user interface (GUI) if your host is configured with a graphics card or if you want to export your display to an X-Windows terminal. SMIT can also be used with an ASCII interface, which can be accessed through an ASCII terminal or console window on another system on the network. Because the ASCII interface is available on all systems, it is used as an example in the remainder of this appendix, but either interface can be used to perform the procedures described here. In addition, the same operations can be performed directly from the command line using standard AIX system administration commands.

Note – Use the Enter key when you have finished filling out a screen to advance to the next screen. Use the keystroke combinations shown on the screen to move back to previous screens.

---

1. Start SMIT using the ASCII interface to display the **System Management** screen.

```
# smit -a
```

2. Choose **System Storage Management (Physical and Logical Storage)** from the **System Management** menu.
3. Choose **Logical Volume Manager** from the **System Storage Management** menu.

   The Logical Volume Manager menu is displayed on the Logical Volume Manager screen. You use menu options from this menu to create a Volume Group and then a Logical Volume within this Volume Group.

```
Logical Volume
Manager
Volume Groups
Logical Volumes
Physical Volumes
Paging Space
```

   Volume Groups are a way of dividing and allocating disk storage capacity. Volume groups can be used to subdivide a large partition of storage into smaller units of usable space called logical volumes.

   Each volume group is divided into Logical Volumes, which are seen by applications as individual disks. Logical Volumes can contain their own file systems.

   The underlying physical storage in a volume group consists of one or more Physical Volumes. A physical volume can be a single physical disk or a partition of a disk array. In this appendix, the physical volume is the disk device you identified in "Identifying the Device On Which To Create a Logical Volume" on page G-4.

G.5 Creating a Volume Group

1. Choose **Volume Group** from the **Logical Volume Manager** menu.
2. Choose **Add a Volume Group** from the **Volume Groups** menu.
3. Type the name you want to give the volume group next to **Volume Group** name.
4. Next to PHYSICAL VOLUME name, type the name of the disk device you identified in "Identifying the Device On Which To Create a Logical Volume" on page G-4.

   A confirmation prompt is displayed.
5. Confirm this message to display a status screen.

   When the volume group is created, a status screen displays **Command: OK**.
6. Return to the **Volume Groups** screen to activate the new volume group.
7. Choose **Activate a Volume Group** from the **Volume Groups** menu.

8. Next to **VOLUME GROUP** name, type the name you gave the volume group.

   When the volume group is activated, a status screen displays **Command: OK**.

G.6 Creating a Logical Volume

1. Return to the **Logical Volume Manager** screen.
2. Choose **Logical Volumes** from the **Logical Volume Manager** menu to display the **Logical Volumes** screen.
3. Choose **Add a Logical Volume** from the **Logical Volumes** menu to display the **Add a Logical Volume** screen.
4. Type the name you gave the volume group next to **VOLUME GROUP** name.

   The **Add a Logical Volume** screen is displayed.
5. Type the name you want to give the new logical volume next to **LOGICAL VOLUME (new)**.
6. Type the number of partitions you want to create on the new logical volume next to **Number of LOGICAL PARTITIONS**.
7. Type the values you want to use for the other parameters on the **Add a Logical Volume** screen or accept the default values.

   When the logical volume is created, a status screen displays **Command: OK** and displays the name of the new logical volume.

G.7 Creating a File System

The following steps create a file system on the new logical volume.

1. Return to the **System Storage Management (Physical and Logical Storage)** screen.

   The **System Storage Management** screen is displayed.
2. Choose **File Systems** from the **System Storage Management** menu to display the **File Systems** screen.
3. Choose **Add / Change / Show / Delete File Systems** from the **File Systems** menu.
4. Choose **Journaled File System** to display the **Journaled File System** screen.
5. Choose **Add a Journaled File System** from the **Journaled File System** menu.
6. Choose **Add a Standard Journaled File System** to display the **Volume Group Name** screen.

   The **Volume Group Name** screen displays the names of available volume groups.

7. Move the cursor to highlight the name of the volume group you created in “Creating a Volume Group” on page G-5.

   The **Add a Standard Journaled File System** screen is displayed.

8. Specify the size of the file system you want to create by typing the number of blocks you want next to SIZE of file system (in 512-byte blocks).

9. Next to **MOUNT POINT**, type the directory name (and filepath, if desired) on which you want to mount the new file system.

Note – If the mount point directory does not already exist, it is created.

When the file system is created, a status screen displays **Command: OK**, the Journaled File System, the mount point, and the size of the file system.

G.8 Mounting the New File System

1. Return to the **File Systems** screen.

2. Choose **List All File Systems** from the **File Systems** menu to see the names of all file systems.

3. Identify the name of the file system you created in the Name column; for example, **`ldev/lv00`**.

4. Choose **Mount a File System** from the **File Systems** menu to display the **Mount a File System** screen.

5. Type the name of the file system you identified in step 3 next to **FILE SYSTEM** name.

6. Type the name of the mount point you specified next to **DIRECTORY** over which to mount.

   When the file system is mounted, a status screen displays **Command: OK**.

7. Exit SMIT.

G.9 Verifying That the New File System Is Mounted

1. Use the **`mount`** command to verify that the logical volume is mounted correctly.

```
# mount
```

   The mounted file systems and directories are displayed.

2. Examine the list to make sure your new file system is mounted at the mount point you specified.

3. Display the attributes of the new file system.

```
#  df -k mountpoint
```

APPENDIX H

Configuring an HP Server Running the HP-UX Operating System

This appendix provides access information and LUN setup information needed when you connect a SANnet II U320 SCSI array to a computer running the HP-UX OS.

For a list of supported host bus adapters, refer to the release notes for your array.

The information in this appendix supplements the configuration steps presented in Chapter 4 and covers the following topics:

- "Setting Up a Serial Port Connection" on page H-1
- "Accessing the Firmware Application From an HP Server Running HP-UX" on page H-2
- "Attaching the Disk Array" on page H-4
- "Logical Volume Manager" on page H-5
- "Definitions of Common Terms" on page H-5
- "Creating a Physical Volume" on page H-5
- "Creating a Volume Group" on page H-6
- "Creating a Logical Volume" on page H-8
- "Creating an HP-UX File System" on page H-8
- "Mounting the File System Manually" on page H-8
- "Mounting the File System Automatically" on page H-9

H.1 Setting Up a Serial Port Connection

The RAID controller can be configured by means of a host system running a VT1000 terminal emulation program or by a Windows terminal emulation program such as HyperTerminal.

Note – You can also monitor and configure a RAID array over an IP network using the firmware application or the SANscape program after you assign an IP address to the array. For details, see “Setting Up Out-of-Band Management Over Ethernet” on page 4-30 or refer to the *SANscape User's Guide*.

If you are planning to access your array over an IP network or through a terminal server and only want to connect through a serial port for the initial configuration of the array, it is not necessary to configure a serial port connection from your IBM host. For convenience, installers frequently perform the initial array configuration using a serial port on a portable computer.

If you want to use a Windows portable computer for this initial array configuration, see “Setting Up the Serial Port Connection” on page E-1 for Windows 2000 systems.

If you prefer to connect through a serial port on your HP server, consult the hardware information for your HP host system to locate a serial port you can use for configuring the SANnet II U320 SCSI array. The system documentation also tells you what device file to use in accessing that port. For more information about the baud rate and other communication settings, see “Configuring the RS-232 Serial Port Connection” on page 4-28.

Note – The next section also shows how to use the Kermit utility to set these parameters.

H.2 Accessing the Firmware Application From an HP Server Running HP-UX

The RAID controller can be configured from the host system by means of terminal emulators such as **`cu`** or Kermit. These instructions show the use of Kermit. For information on **`cu`**, see `cu(1)`.

To access the controller firmware through the serial port, perform the following steps.

1. Connect the serial null-modem cable to the disk array and to the serial port on the HP server.

Note – A DB9-to-DB25 serial cable adapter is shipped with the disk array to connect the serial cable to a DB25 serial port on your host if you do not have a DB9 serial port.

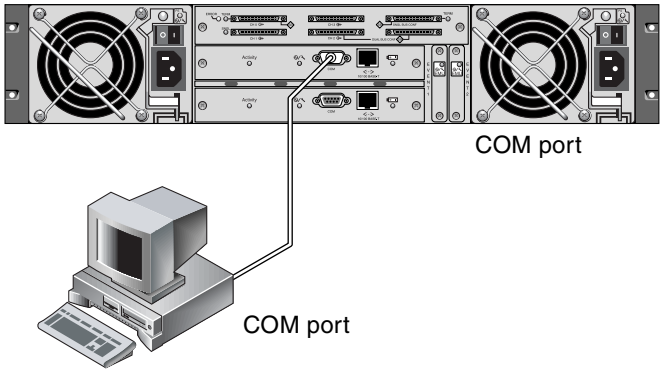

FIGURE H-1 RAID Array COM Port Connected Locally to the Serial Port of a Host System

2. Power on the array.
3. After the array is powered up, power on the HP server and log in as **root**, or **su** to **root** if you are logged in as a user.
4. Start the Kermit program and set the parameters as shown in the following example. Use the device-specific name for the serial port you are using. In the example, the serial port being configured is **/dev/tty0p1**.

```
# kermit

Executing /usr/share/lib/kermit/ckermit.ini for UNIX...

Good Morning!

C-Kermit 7.0.197, 8 Feb 2000, for HP-UX 11.00

Copyright (C) 1985, 2000,

Trustees of Columbia University in the City of New York.

Type ? or HELP for help.

(/) C-Kermit>set line /dev/tty0p1

(/) C-Kermit>set baud 38400

/dev/tty0p1, 38400 bps

(/) C-Kermit>set term byte 8

(/) C-Kermit>set carrier-watch off
```

```
(/) C-Kermit>C

Connecting to /dev/tty0p1, speed 38400.

The escape character is Ctrl-\ (ASCII 28, FS)

Type the escape character followed by C to get back,

or followed by ? to see other options.
```

Note – To return to the Kermit prompt type **Ctrl ** and then **C**. To exit Kermit, first return to the Kermit prompt, and then type **exit**.

H.3 Attaching the Disk Array

The simplest way to configure a disk array is to use System Administration Manager (SAM), HP-UX's system administration tool. If SAM is not installed on your system, or if you prefer to use the command-line interface, the following procedures can guide you through the task. For more information, consult the HP document *Configuring HP-UX for Peripherals*:

1. Use the **ioscan** command to determine what addresses are available on the host bus adapter (HBA) you plan to attach to the array.
2. Access the firmware application on the SANnet II U320 SCSI array and set the SCSI IDs of the host channels you want to use.
3. Map the partitions containing storage that you want to use to the appropriate host channels.

   Partitions must be assigned to LUNs in sequential order beginning at LUN 0.
4. Halt the OS using the **shutdown** command.
5. Turn off all power to peripheral devices and then to the server.
6. Attach one or more host channels of the SANnet II U320 SCSI array to the SCSI interface cards in the host using the supplied SCSI cables.
7. Turn on the power to the SANnet II U320 SCSI array and all other peripheral devices.
8. After they are initialized, power on the server and boot HP-UX.

   During the boot process, the OS recognizes the new disk devices and builds device files for them.
9. Verify that you can see the new storage resources by running the **ioscan** command. You are now ready to use the storage.

Note – If you create and map new partitions to the array, you can have them recognized by the OS without rebooting. Run the **ioscan** and the **insf** commands to discover the resources and to create their device files.

H.4 Logical Volume Manager

The Logical Volume Manager (LVM) is a disk management system provided by HP in all versions of HP-UX 11. The LVM allows you to manage storage as logical volumes. This section describes some concepts used by the LVM and explains how to create logical volumes on your SCSI array. For more detailed information on the LVM, consult **lvm**(7) and the HP publication *Managing Systems and Workgroups: Guide for HP-UX System Administration* (HP part number B2355-90742).

As with many systems administration tasks you can use SAM to create and maintain logical volumes; however some functions can only be performed with HP-UX commands. The procedures in this appendix are performed using the command-line interface rather than using SAM.

H.5 Definitions of Common Terms

Volume groups are HP-UX's method for dividing and allocating disk storage capacity. Volume groups can be used to subdivide a large partition of storage into smaller units of usable space called logical volumes.

Each volume group is divided into *logical volumes*, which are seen by the applications as individual disks. They can be accessed as either character or block devices and can contain their own file systems.

The underlying physical storage in a volume group consists of one or more *physical volumes*. A physical volume can be a single physical disk or a partition of a disk array.

Each physical volume is divided into units called *physical extents*; the default size of these units is 4 Mbyte, but can range in size from 1 Mbyte to 256 Mbyte. The maximum number of physical extents that a volume group can contain is 65,535. With the default size of 4 Mbyte, this limits the size of the volume group to 255 Gbyte.

To create a volume group larger than 255 Gbyte, you must increase the size of the physical extents when creating the volume group. See `vgcreate(1m)` for further information.

H.6 Creating a Physical Volume

To use a storage resource in the LVM, it must first be initialized into a physical volume (also called an LVM disk).

Log in as **root**, or **su** to **root** if you are not logged in with root user privileges.

1. Select one or more partitions on the SANnet II U320 that you want to use. The output of **ioscan**(1M) shows the disks attached to the system and their device names:

```
# ioscan  -fnC  disk

Class  I   H/W  Path     Driver  S/W State  H/W Type  Description
-------------------------------------------------------------------
disk   1  0/12/0/0.6.0  sdisk   CLAIMED    DEVICE     SANnet II 220 SCSI

/dev/dsk/c12t6d2 /dev/rdsk/c12t6d2
```

2. Initialize each partition as an LVM disk with the `pvcreate` command. For example, enter:

```
# pvcreate  /dev/rdsk/c12t6d2
```

Caution – This process results in the loss of any data that resides on the partition.

H.7 Creating a Volume Group

The volume group contains the physical resources that you can use to create usable storage resources for your applications.

1. Create a directory for the volume group and a device file for the group in that directory:.

```
# mkdir /dev/vgmynewvg

# mknod /dev/vgmynewvg/group c 64 0x060000
```

The name of the directory is the name of the volume group. By default, HP-UX uses names of the format **vg***NN***,** but you can chose any name that is unique within the list of volume groups.

In the preceding example the **mknod** command has the following arguments:

- The fully qualified pathname of the new device file **group**
- The letter **c** indicates a character device file
- The major number 64 (used for all volume groups)
- A minor number of the form **0x***NN***0000**, where *NN* is the two-digit hexadecimal representation of the volume group number (06 in the example)

To associate the physical volume with a volume group use the **vgcreate** command:

```
# vgcreate /dev/vgmynewvg /dev/dsk/c12t6d2
```

To verify the creation and view the volume group properties, use the **vgdisplay** command.

```
# vgdisplay vg02
--- Volumegroups -
--
VG Name                     /dev/vg02
VG Write Access             read/write
VG Status                   available
Max LV                      255
Cur LV                      0
Open LV                     0
Max PV                      16
Cur PV                      1
Act PV                      1
Max PE per PV               2167
VGDA                        2
PE Size (Mbytes)            4
Total PE                    2167
Alloc PE                    0
Free PE                     2167
Total PVG                   0
```

In the output of **vgdisplay**, the Total PE field gives the number of physical extents in the volume group.

The size of each physical extent is given in the PE Size field (the default is 4 Mbyte), so the total capacity of this volume group is 2167 x 4 Mbyte = 8668 Mbyte.

The Alloc PE field shows the numbers of physical extents allocated to logical volumes. At this point, the Alloc PE field is zero because we have not assigned any of this volume group's capacity to logical volumes.

H.8 Creating a Logical Volume

To create a logical volume within the volume group, use the **lvcreate** command with the **-L** option to specify the size of the logical volume in megabytes. The logical volume size should be a multiple of the physical extent size. In the following example, a logical volume of 4092 Mbyte is created:

```
# lvcreate -L 4092 /dev/vg02
```

Both character and block device files for the new logical volume are created in the volume group directory:

```
# ls /dev/vg02

group   lvol1   rlvol1
```

Applications should use these names to access the logical volumes. Unless you specify otherwise, HP-UX creates names in the form shown in the example. To specify custom names for logical volumes, see **vgcreate**(1M).

H.9 Creating an HP-UX File System

The following command creates a file system on the logical volume created in the previous steps.

```
# /sbin/newfs -F vxfs /dev/vgmynewvg/rlvol1
```

H.10 Mounting the File System Manually

The process of incorporating a file system into the existing directory structure is known as mounting the file system. The files, although present on the disk, are not accessible to users until they are mounted.

1. Create a directory to use as the mount point for your new file system:

```
# mkdir /usr/local/myfs
```

2. To mount your file system, type the following:

```
# mount /dev/vgmynewvg/lvol1 /usr/local/myfs
```

H.11 Mounting the File System Automatically

By placing information about your file system in the **fstab** file, you can have HP-UX mount the file system automatically during bootup. You can also use the name of the mount point in mount commands that you issue from the console.

1. Make a copy of the existing **fstab** file:

```
# cp /etc/fstab /etc/fstab.orig
```

2. To include the file system created in the example, add the following line to the file **/etc/fstab**.

```
/dev/vg0mynewvg/lvol1 /usr/local/myfs vxfs delaylog 0 2
```

   See the entry for `fstab(4)` for details on creating **/etc/fstab** entries.

3. To check to see if **fstab** was set up correctly, type:

```
# mount -a
```

   If the mount point and the **fstab** file are correctly set up, no errors appear.

4. To verify it is mounted and list all mounted file systems, type:

```
# bdf
```

5. To unmount the file system, type:

```
# umount /usr/local/myfs
```

Index

A

activity LED 5–2, 5–7
Agent Options Management window B–10
AIX servers
  configuring G–1
  connecting to the firmware G–2
  creating a file system G–6
  creating a logical volume G–6
  creating a volume group G–5
  identifying devices G–4
  Kermit access G–3
  mounting a file system G–7
  serial port parameters G–1
  using SMIT to recognize LUNs G–4
alarms
  silencing 6–4
  viewing with SANscape B–10
array
  mounting 3–3
  troubleshooting 7–1

B

battery
  description 1–7
  status 6–3
battery LED 5–2, 5–7, 6–3
baud rate 4–28, E–2
beep codes, muting 6–4
bus configurations 4–9

C

cabinet-mounting an array 3–3
cabling
  cables supplied 3–2
  configurations 4–9
  customer-provided 3–3
  drive IDs label summary 4–10
  Ethernet connection 4–30
  expansion units 4–20
  limited number of drive IDs 4–17
  picture of connections 4–5
  procedures 4–1
  RS-232 connection 4–28
  scenarios 4–17
  single-bus drive IDs 4–14
  single-bus procedures 4–11
  Solaris procedures D–2
  summary 4–2
CD-ROM supplied 1–8
channels
  configuring array settings 4–11
  maximum number 4–17
clearances to allow 2–4
COM port
  connecting to 4–28
COM port connection E–1
COM port parameters G–3, H–4
communication parameters 4–28
components
  silencing alarms 6–4
  viewing status with SANscape B–10, B–11
configuring
  AIX servers G–1
  HP-UX servers H–1
  inband management 6–3
  Linux servers F–1
  out-of-band management 4–30
  serial port connection E–1

Solaris servers D–1
Windows 2000 servers E–1
controller failover 7–4
customer obligations 2–1

D

device status
icons B–11
viewing with SANscape B–11
device status icon B–11
DHCP 4–29
disk drives 1–6
drive channel defaults 4–10
drive failure
recovering from fatal 7–4
drive IDs
limitations 4–17
single-bus configurations 4–14
split-bus configurations 4–16
drive LEDs
troubleshooting 7–10
drives
overview 1–6
scanning 6–1
troubleshooting 7–10
dual-bus, See split-bus
Dynamic Host Configuration Protocol 4–29

E

electrical specifications 2–3
electromagnetic compatibility (EMC) 2–3
EMU LED 5–9
environmental range 2–3
Ethernet connection 4–30
event LED 5–3
event logs
HP-UX B–14
IBM AIX B–15
viewing 6–6
expansion unit cabling 4–12, 4–20

F

failed component alarms, silencing 6–4
fan LED 5–3
fan module FRU 1–7
fans, troubleshooting 7–8
fatal drive failure
recovering from 7–4
fault-tolerance 7–3
field-replaceable units, See FRUs
firmware
controller failure/rebuild/replacement 7–3
controller firmware upgrade 6–7
view event logs 6–6
flowcharts, troubleshooting 7–7
format utility D–7
FRUs
battery 1–7
drives 1–6
fan module 1–7
I/O controller module 1–5
I/O expansion module 1–6
listing 3–3
power module 1–7

G

gray device status item B–11

H

hardware overview 1–2
hardware specifications A–2
host channel defaults 4–10
host configuration
HP-UX H–1
IBM AIX G–1
Linux F–1
Solaris operating system D–1
Windows 2000 E–1
host LUNs
defined in sd.conf D–4
edit system file D–4
HP-UX servers
accessing the firmware H–2
attaching the array H–4
configuring H–1
creating a file system H–8
creating a logical volume H–8
creating a physical volume H–5
creating a volume group H–6
definitions of common terms H–5
Kermit access H–4
Logical Volume Manager H–5

mounting the file system H–8
serial port parameters H–1
using SAM H–4
using the CLI H–4
humidity 2–3

I

I/O controller module
FRU 1–5
troubleshooting 7–18
I/O expansion module 1–6
IBM AIX operating system B–15
icon status in SANscape B–11
inband connection 6–3
interoperability 1–7
IP address, setting 4–29, 4–30

J

JBODs
cabling B–1
displaying component and alarm characteristics B–10
single-bus configuration B–10
single-bus with one host B–3
single-bus with two hosts B–4
split-bus, multi-initiator B–7
troubleshooting 7–3

L

labeling, reconfiguring D–6
LEDs
back panel 5–5
drives 5–2
front panel 5–3
troubleshooting 7–14
limitations
drive IDs 4–17
Linux servers
checking adapter BIOS F–1
configuring F–1
making a filesystem F–3
mounting a filesystem F–4
multiple LUNs F–2
LUNs
adding in Solaris D–2
assigning in HP-UX H–4
number supported A–2
recognizing in AIX G–4
recognizing in Linux F–1
recognizing in Solaris D–4
recognizing in Windows 2000 E–4
troubleshooting 7–3

M

mounting your array 3–3
muting
alarms 6–4
beeper 6–4

N

null modem cable 4–28
null modem serial cable 4–28

O

operating systems supported 1–7
out-of-band connection 6–2
out-of-band management 4–30

P

package contents 3–2
parameters
serial port 4–28
partitions
creating in AIX G–6
creating in HP-UX H–4
creating in Linux F–3
creating in Windows 2000 E–5
requirements 7–3
performance problems 1–6, 3–3
planning site 2–1
ports
connecting for single-bus 4–11
connecting to hosts 4–19
expansion unit connections 4–12
power LED 5–3
power module FRU 1–7
power specifications 2–3
power supplies, troubleshooting 7–8
power supply/fan LED 5–8
power-off procedure 4–32

power-on sequence 4–32
purple device status icon B–11

R

rackmounting an array 3–3
RARP 4–29
reconfiguring a volume D–6
recovering from drive failure 7–4
red device status item B–11
redundant controller 7–4
release notes 1–8
Reset button 5–2, 6–5
Reverse Address Resolution Protocol 4–29
RS-232
  connecting to 4–28, E–1

S

safety precautions 2–2
SANscape
  component characteristics B–10
  enabling JBOD support B–9
  main window B–11
  overview B–9
  viewing alarms with B–10
SANscape Alert 1–8
SANscape CLI
  viewing status with B–10
SCSI array
  configuration options 1–3
sd.conf file D–2
serial cable
  null modem 4–28
serial port connection E–1
serial port parameters 4–28, G–3, H–4
setting an IP address 4–29
silencing alarms 6–4
single-bus
  cabling procedures 4–11
  configurations 4–9
  drive IDs 4–14
  icon 4–10
site planning
  console requirement 2–6
  customer obligations 2–1
  electrical/power 2–3
  EMC 2–3
  environmental 2–3
  layout 2–4
  physical 2–4
  preparation 2–1
  safety precautions 2–2
site preparation survey 2–6
software tools 1–8
Solaris servers
  configuring D–1
  edit system file D–4
  editing sd.conf file D–2
  labeling a volume D–6
  new devices and LUNs D–4
  rebooting D–6
specifications
  clearances 2–4
  electrical/power 2–3
  physical (array) 2–4
  product A–2
split-bus
  configurations 4–9
  icon 4–10
status LED 5–2, 5–7
system file D–4

T

targets
  adding in Solaris D–2
temp LED 5–3
temperature
  environmental range 2–3
temperature LED 5–3
troubleshooting
  flowcharts 7–7
  topics 7–1

V

View Enclosure window B–10
volume, labeling D–6
VT100 terminal connection 4–28

W

white device status item B–11
Windows 2000 servers
  accessing HyperTerminal E–3
  configuring server E–1

new devices and LUNs E–4
SANpath E–1
serial port parameters E–1
writing events to log files B–15

Y

yellow device status item B–11