SEAGATE

BARRACUDA PRO

COMPUTE

SATA Product Manual

Standard models

ST1000LM049

ST500LM034

SED-FIPS 140-2 models

ST1000LM050

ST500LM035

Self-Encrypting Drive model

ST500LM036

100818135, Rev. H

August 2018

Document Revision History

Revision	Date	Pages affected and Description of change
Rev. A	03/28/2017	Initial release.
Rev. B	05/02/2017	fc, 6-9 & 23-24: Corrected model information 7: Revised maximum weight to 90g/0.198lb 9: Revised typical weight to 85g/0.187lb
Rev. C	07/13/2017	13: Updated Acoustic max values
Rev. D	09-24-2017	15-18: Updated Sections 2.12 through 2.14.3 21: Inserted: Figure 3: Mounting Dimensions (for 1-disk models) (alternate basedeck)
Rev. E	10-06-2017	20-21: Updated Figures 2-3 (mechanical drawings)
Rev. F	03-06-2018	fc, 6, 8, 10 & 30-32: Added SED & SED-FIPS models 6 & 15: Added SED & FIPS text 19: Updated Table 11: Taiwan - Restricted Substances (character corrections) 20: Added Section 2.15: Reference documents 24-26: Added Sections - 4.0 About FIPS & 5.0 About (SED) Self-Encrypting Drives
Rev. G	06-13-2018	8 & 10: Corrected average latency to 4.2 ms
Rev. H	08-17-2018	18: Updated Table 11: Taiwan - Restricted Substances

© 2018 Seagate Technology LLC. All rights reserved.

Publication number: 100818135, Rev. H August 2018

Seagate, Seagate Technology and the Spiral logo are registered trademarks of Seagate Technology LLC in the United States and/or other countries. SeaTools and 3D Defense System are either a trademark or registered trademark of Seagate Technology LLC or one of its affiliated companies in the United States and/or other countries. The FIPS logo is a certification mark of NIST, which does not imply product endorsement by NIST, the U.S., or Canadian governments. All other trademarks or registered trademarks are the property of their respective owners.

No part of this publication may be reproduced in any form without written permission of Seagate Technology LLC.
Call 877-PUB-TEK1(877-782-8351) to request permission.

When referring to drive capacity, one gigabyte, or GB, equals one billion bytes and one terabyte, or TB, equals one trillion bytes. Your computer's operating system may use a different standard of measurement and report a lower capacity. In addition, some of the listed capacity is used for formatting and other functions, and thus will not be available for data storage. Actual quantities will vary based on various factors, including file size, file format, features and application software. Actual data rates may vary depending on operating environment and other factors. The export or re-export of hardware or software containing encryption may be regulated by the U.S. Department of Commerce, Bureau of Industry and Security (for more information, visit www.bis.doc.gov), and controlled for import and use outside of the U.S. Seagate reserves the right to change, without notice, product offerings or specifications.

Contents

Seagate® Technology Support Services **5**

1.0 Introduction **6**
1.1 About the Serial ATA Interface 7

2.0 Drive Specifications **8**
2.1 Formatted Capacity 9
2.1.1 LBA mode 9
2.2 Physical organization 10
2.3 Recording and Interface Technology 10
2.4 Physical Characteristics 10
2.5 Seek time 10
2.6 Start/stop times 11
2.7 Power Specifications 11
2.7.1 Power consumption 11
2.7.2 Conducted noise 11
2.7.3 Supply Voltage 11
2.7.4 Power management modes 12
2.8 Environmental Specifications 12
2.8.1 Shock 13
2.8.2 Vibration 13
2.9 Acoustics 13
2.9.1 Test for prominent discrete tones (PDTs) 14
2.10 Electromagnetic Immunity 14
2.10.1 DC Magnetic Field Immunity 14
2.11 Reliability 15
2.11.1 Data loss under power interruption with write cache enabled 15
2.12 Agency and Safety Certifications 15
2.12.1 Safety certification 15
2.12.2 Regulatory Models 15
2.12.3 European Union (EU) CE Marking Requirements 16
2.12.4 Australian RCM Compliance Mark 16
2.12.5 Canada ICES-003 16
2.12.6 South Korean KC Certification Mark 16
2.12.7 Morocco Commodity Mark 16
2.12.8 Taiwanese BSMI 16
2.13 FCC verification 17
2.14 Environmental protection 17
2.14.1 European Union Restriction of Hazardous Substance Law 17
2.14.2 China Requirements —China RoHS 2 18
2.14.3 Taiwan Requirements — Taiwan RoHS 18
2.15 Reference documents 19
2.16 Corrosive Environment 19

Contents

3.0 Configuring and Mounting the Drive 20

3.1 Handling and Static-Discharge Precautions 20
3.2 Configuring the Drive 20
3.2.1 Serial ATA Cables and Connectors 20
3.3 Drive Mounting 21

4.0 About FIPS 23

5.0 About (SED) Self-Encrypting Drives 24

5.1 Data Encryption 24
5.2 Controlled Access 24
5.2.1 Admin SP 24
5.2.2 Locking SP 24
5.2.3 Default password 24
5.2.4 ATA Enhanced Security 24
5.3 Random Number Generator (RNG) 25
5.4 Drive Locking 25
5.5 Data Bands 25
5.6 Cryptographic Erase 25
5.7 Authenticated Firmware Download 25
5.8 Power Requirements 25
5.9 Supported Commands 25
5.10 RevertSP 25

6.0 Serial ATA (SATA) Interface 26

6.1 Hot-Plug Compatibility 26
6.2 Serial ATA Device Plug Connector Pin Definitions 26
6.3 Supported ATA Commands 27
6.3.1 Identify Device command 29
6.3.2 Set Features command 32
6.3.3 S.M.A.R.T. commands 33

Figures

Figure 1 Attaching SATA Cabling 20
Figure 2 Mounting Dimensions (for 1-disk models) 21
Figure 3 Mounting Dimensions (for 1-disk models) (alternate basedeck). 22
Figure 4 Example of FIPS tamper evidence labels. 23

Seagate® Technology Support Services

For information regarding online support and services, visit: http://www.seagate.com/contacts/

For information regarding Warranty Support, visit: http://www.seagate.com/support/warranty-and-replacements/

For information regarding data recovery services, visit: http://www.seagate.com/services-software/recover/

For Seagate OEM, Distribution partner and reseller portals, visit: http://www.seagate.com/partners/

1.0 Introduction

This manual describes the functional, mechanical and interface specifications for the following Seagate® BarraCuda® Pro model drives:

Standard models	SED-FIPS models	SED models
ST1000LM049	ST1000LM050	
ST500LM034	ST500LM035	ST500LM036

Note	Previous generations of Seagate Self-Encrypting Drive models were called Full Disk Encryption (FDE) models before a differentiation between drive-based encryption and other forms of encryption was necessary.

For more information on SED drives see **About (SED) Self-Encrypting Drives** on page 24.

For more information on FIPS 140-2 Level 2 certification see **About FIPS** on page 23.

These drives provide the following key features:

- 1000 Gs non-operating shock and 400 Gs of operating shock.
- 128MB buffer.
- 7200-RPM spindle speed.
- Full-track multiple-sector transfer capability without local processor intervention.
- High instantaneous (burst) data-transfer rates (up to 6Gb/s).
- MTC Technology™, proprietary data flow management
- Native Command Queuing (NCQ) with command ordering.
- Quiet operation. Fluid Dynamic Bearing (FDB) motor.
- SeaTools™ diagnostic software performs a drive self-test that eliminates unnecessary drive returns.
- Shingled magnetic recording with perpendicular magnetic recording heads/media.
- State-of-the-art cache and on-the-fly error-correction algorithms.
- Support for Read Multiple and Write Multiple commands.
- Support for S.M.A.R.T. drive monitoring and reporting.
- Worldwide Name (WWN) capability uniquely identifies the drive.

BarraCuda Pro Self-Encrypting Drive models have the following additional features

- 16 independent data bands
- Authenticated firmware download.
- Automatic data encryption/decryption
- Controlled access
- Cryptographic erase of user data for a drive that will be repurposed or scrapped
- Drive locking
- Random number generator

There is no significant performance difference between Self-Encrypting Drive and standard (non-Self-Encrypting Drive) models.

1.1 About the Serial ATA Interface

The Serial ATA interface provides several advantages over the traditional (parallel) ATA interface. The primary advantages include:

- Easy installation and configuration with true plug-and-play connectivity. It is not necessary to set any jumpers or other configuration options.
- Thinner and more flexible cabling for improved enclosure airflow and ease of installation.
- Scalability to higher performance levels.

In addition, Serial ATA makes the transition from parallel ATA easy by providing legacy software support. Serial ATA was designed to allow users to install a Serial ATA host adapter and Serial ATA disk drive in the current system and expect all of the existing applications to work as normal.

The Serial ATA interface connects each disk drive in a point-to-point configuration with the Serial ATA host adapter. There is no master/slave relationship with Serial ATA devices like there is with parallel ATA. If two drives are attached on one Serial ATA host adapter, the host operating system views the two devices as if they were both "masters" on two separate ports. This essentially means both drives behave as if they are Device 0 (master) devices.

Note	The host adapter may, optionally, emulate a master/slave environment to host software where two devices on separate Serial ATA ports are represented to host software as a Device 0 (master) and Device 1 (slave) accessed at the same set of host bus addresses. A host adapter that emulates a master/slave environment manages two sets of shadow registers. This is not a typical Serial ATA environment.

The Serial ATA host adapter and drive share the function of emulating parallel ATA device behavior to provide backward compatibility with existing host systems and software. The Command and Control Block registers, PIO and DMA data transfers, resets, and interrupts are all emulated.

The Serial ATA host adapter contains a set of registers that shadow the contents of the traditional device registers, referred to as the Shadow Register Block. All Serial ATA devices behave like Device 0 devices. For additional information about how Serial ATA emulates parallel ATA, refer to the *Serial ATA International Organization: Serial ATA* (Revision 3.2). The specification can be downloaded from www.serialata.org.

2.0 Drive Specifications

Unless otherwise noted, all specifications are measured under ambient conditions, at 25°C, and nominal power. For convenience, the phrases *the drive* and *this drive* are used throughout this manual to indicate the following drive models:

The specification summaries listed in the following tables are for quick reference. For details on specification measurement or definition, refer to the appropriate section of this manual.

Table 1 Drive Specifications Summary

Drive Specification	ST1000LM049 & ST1000LM050	ST500LM034, ST500LM035 & ST500LM036
Formatted capacity (1)	1TB	500GB
Guaranteed sectors	1,953,525,168	976,773,168
Heads	2	
Disks	1	
Bytes per sector	512 (logical) / 4096 (physical)	
Recording density	2350 Kb/in	
Track density	580 Ktracks/in avg	
Areal density	1366 Gfc/in^2 avg	
Spindle speed	7200 RPM	
Maximum sustained data rate, OD read	160 MB/s	
Interface	SATA 6Gb/s	
ATA data-transfer modes supported	PIO modes 0–4 Multiword DMA modes 0–2 Ultra DMA modes 0–6	
Cache buffer	128 MB	
Height (mm/in)	7.0 (± 0.2) / 0.276 (± 008)	
Width (mm/in)	69.85 (± 0.25) / 2.750 (± 0.010)	
Length (mm/in)	100.35 (+0.20/-0.25) / 3.951 (+0.008/-0.010)	
Weight (g/lb) max	90 / 0.198	
Average latency	4.2 ms	
Startup current, Max (+5V)	1.0 A	
Voltage tolerance (including noise)	5V ± 5%	
Non-Operating (Ambient °C)	–40° to 70°	
Operating temperature	0° to 60°	
Temperature gradient	20°C per hour max (operating) 35°C per hour max (non-operating)	
Relative humidity	5% to 90% (operating) 5% to 95% (non-operating)	
Relative humidity gradient (max)	30% per hour	
Wet bulb temperature	37.7°C max (operating) 40.0°C max (non-operating)	
Altitude, operating	–304.8 m to 3048 m (–1000 ft to 10,000+ ft)	
Altitude, non-operating (below mean sea level, max)	–304.8 m to 12,192 m (–1000 ft to 40,000+ ft)	

Table 1 Drive Specifications Summary (continued)

Drive Specification	ST1000LM049 & ST1000LM050	ST500LM034, ST500LM035 & ST500LM036
Operational Shock	400 Gs at 2 ms max	
Non-Operational Shock	1000 Gs at 1 ms max	
Vibration, operating	5–200 Hz: 2.0 Gs 201–500 Hz: 1.0 Gs	
Vibration, non-operating	5–500 Hz: 5.0 Gs	
Non-recoverable read errors	1 per 10^{14} bits read	
Rated workload	Average annualized workload rating: <55 TB/year. The specifications for the product assumes the I/O workload does not exceed the average annualized workload rate limit of 55 TB/year. Workloads exceeding the annualized rate may degrade and impact reliability as experienced by the particular application. The average annualized workload rate limit is in units of TB per calendar year.	
Warranty	To determine the warranty for a specific drive, use a web browser to access the following web page: http://www.seagate.com/support/warranty-and-replacements/. From this page, click on the "Is my Drive under Warranty" link. The following are required to be provided: the drive serial number, model number (or part number) and country of purchase. The system will display the warranty information for the drive.	
Load-unload cycles	600,000 at 30°C, 50% rel. humidity	
Supports Hotplug operation per the Serial ATA Revision 3.2 specification	Yes	

1. One GB equals one billion bytes when referring to hard drive capacity.
   Accessible capacity may vary depending on operating environment and formatting.

† Seagate does not recommend operating at sustained case temperatures above 60°C.
  Operating at higher temperatures will reduce useful life of the product.

Note	If the drive is powered-off before issuing flush cache command, in some instances, the end user data in the DRAM cache might not be committed to the disk.

2.1 Formatted Capacity

Model	Formatted Capacity(1)	Guaranteed Sectors	Bytes per Sector
1TB model	1000 GB	1,953,525,168	512 (logical) / 4096 (physical)
500GB model	500 GB	976,773,168	

1. One GB equals one billion bytes when referring to hard drive capacity. Accessible capacity may vary depending on operating environment and formatting.

2.1.1 LBA mode

When addressing these drives in LBA mode, all blocks (sectors) are consecutively numbered from 0 to *n–1*, where *n* is the number of guaranteed sectors as defined above.

Refer to **Configuring and Mounting the Drive** on page 20 (words 60-61 and 100-103) for additional information about 48-bit addressing support of drives with capacities over 137 GB.

2.2 Physical organization

Drive model	Read/write heads	Number of discs
All models	2	1

2.3 Recording and Interface Technology

Interface	SATA 6Gb/s
Recording method	Perpendicular
Recording density	2350 Kb/in
Track density	580 ktracks/in avg
Areal density	1366 Gfc/in^2 avg
Spindle speed	7200 RPM
Data transfer rate (up to)	160 MB/s

2.4 Physical Characteristics

Height (mm/in)	7.0 (± 0.2) / 0.276 (± 008)
Width (mm/in)	69.85 (± 0.25) / 2.750 (± 0.010)
Length (mm/in)	100.35 (+0.20/-0.25) / 3.951 (+0.008/-0.010)
Typical weight (g/lb)	85 / 0.187
Cache buffer	128MB

2.5 Seek time

Seek measurements are taken with nominal power at 25°C ambient temperature. All times are measured using drive diagnostics. The specifications in the table below are defined as follows:

- Track-to-track seek time is an average of all possible single-track seeks in both directions.
- Average seek time is a true statistical random average of at least 5000 measurements of seeks between random tracks, less overhead.

Table 2 Typical seek times

Typical seek times (ms)	Read
Track-to-track	0.5
Average	13.0
Average latency	4.2

Note	These drives are designed to consistently meet the seek times represented in this manual. Physical seeks, regardless of mode (such as track-to-track and average), are expected to meet the noted values. However, due to the manner in which these drives are formatted, benchmark tests that include command overhead or measure logical seeks may produce results that vary from these specifications.

2.6 Start/stop times

Table 3 Start/stop times

Capacity	1-disk models	1-disk models
Typical seek times (ms)	**Typical**	**Max @ 25°C**
Power-on to ready (sec)	3.2	3.5
Standby to ready (sec)	2.5	3.0

2.7 Power Specifications

The drive receives DC power (+5V) through a native SATA power connector (refer to **Figure 1**).

2.7.1 Power consumption

Power requirements for the drives are listed in the table in **Table 4**. Typical power measurements are based on an average of drives tested, under nominal conditions, at 25°C ambient temperature. These power measurements are done with DIPM enabled.

- Spinup current is measured from the time of power-on to the time that the drive spindle reaches operating speed.
- Read/Write current is measured with the heads on track, based on three 64 sector read or write operations every 100 ms.
- The drive supports three idle modes: Performance Idle mode, Active Idle mode and Low Power Idle mode. Refer to Section 2.7.4 for power-management modes.

Table 4 DC Power Requirements

Power Dissipation	1-disk models +5V input average (25° C)
Spinup (max)	1.00A
Write average	1.70W
Read average	1.90W
Idle, low power mode	0.70W
Standby[1]	0.13W
Sleep	0.13W

1. Standby power is measured at steady state (after 200ms from transition)

2.7.2 Conducted noise

Input noise ripple is measured at the host system power supply across an equivalent 15-ohm resistive load on the +5 volt line.

- Using 5-volt power, the drive is expected to operate with a maximum of 100 mV peak-to-peak square-wave injected noise at up to 20 MHz.

Note	Equivalent resistance is calculated by dividing the nominal voltage by the typical RMS read/write current.

2.7.3 Supply Voltage

Allowable voltage	5V ± 5%
Allowable noise/ripple	100 p-p max, 0-20 MHz
Allowable supply rise time	<100 ms

2.7.4 Power management modes

The drive provides programmable power management to provide greater energy efficiency. In most systems, power management is controlled through the system setup program. The drive features the following power-management modes:

Table 5 Power modes

Power modes	Heads	Spindle	Electronics
Active (operating)	Tracking	Rotating	Full power
Idle, performance	Tracking	Rotating	Partial Power
Idle, active	Floating	Rotating	Partial Power
Idle, low power	Parked	Rotating	Partial Power
Standby	Parked	Stopped	Low Power
Sleep	Parked	Stopped	Low Power

- **Active mode**
  The drive is in Active mode during the read/write and seek operations.

n **Idle mode**
The electronics remains powered, and the drive accepts all commands and returns to Active mode when disk access is necessary.

- **Standby mode**
  The drive enters Standby mode immediately the host sends a Standby Immediate command. If the host has set the standby timer, the drive can also enter Standby mode automatically after the drive has been inactive for a specifiable length of time. The standby timer delay is established using a Standby or Idle command. In Standby mode, the electronics are in low power mode, the heads are parked and the spindle is at rest. The drive accepts all commands and returns to Active mode when disk access is necessary.

n **Sleep mode**
The drive enters Sleep mode after receiving a Sleep command from the host. In Sleep mode, the electronics are in low power mode, the heads are parked and the spindle is at rest. The drive leaves Sleep mode after it receives a Hard Reset or Soft Reset from the host. After receiving a reset, the drive exits Sleep mode and enters Standby mode.

n **Idle and standby timers**
Each time the drive performs an active function (read, write or seek), the standby timer is reinitialized and begins counting down from its specified delay times to zero. If the standby timer reaches zero before any drive activity is required, the drive makes a transition to standby mode. In both Idle and standby mode, the drive accepts all commands and returns to active mode when disk access is necessary.

2.8 Environmental Specifications

This section provides the temperature, humidity, shock, and vibration specifications for BarraCuda Pro drives.

Ambient temperature is defined as the temperature of the environment immediately surrounding the drive.

Above 1000 feet (305 meters), the maximum temperature is derated linearly by 1°C every 1000 feet.

Table 6 Environmental specifications

Parameters	Operating	Non-Operating
Ambient temperature	0° to 60°C (32° to 140°F)	-40° to 70°C (-40° to 158°F)
Temperature gradient	20°C per hour (36°F per hour) max, without condensation	35°C per hour (63°F per hour) max, without condensation
Humidity	5% to 90% non-condensing (30% per hour)	5% to 95% non-condensing (30% per hour)
Wet bulb	37.7°C (99.8°F) max	40°C (104°F) max
Altitude	-304.8m to 3048m (-1000ft to 10,000ft)	-304.8m to 12,192m (-1000ft to 40,000ft)

Note	Seagate does not recommend operating at sustained case temperatures above 60°C. Operating at higher temperatures will reduce useful life of the product.

Note	The recommended storage period: • 1 year under controlled conditions of 34°C 90%RH or less • 90 days in uncontrolled storage conditions

2.8.1 Shock

All shock specifications assume that the drive is mounted securely with the input shock applied at the drive mounting screws. Shock may be applied in the X, Y, or Z axis.

2.8.1.1 Operating shock

These drives comply with the performance levels specified in this document when subjected to a maximum operating shock of 400 Gs based on half-sine shock pulses of 2ms. Shocks should not be repeated more than one time per axis.

2.8.1.2 Non-operating shock

The non-operating shock level that the drive can experience without incurring physical damage or degradation in performance when subsequently put into operation is 1000 Gs based on a nonrepetitive half-sine shock pulse of 1 ms duration.

2.8.2 Vibration

All vibration specifications assume that the drive is mounted securely with the input vibration applied at the drive mounting screws. Vibration may be applied in the X, Y, or Z axis.

2.8.2.1 Operating vibration

The maximum vibration levels that the drive may experience while meeting the performance standards specified in this document are specified below.

5–200 Hz	2.0 Gs (0 to peak). Max displacement may apply below 10 Hz.
201–500 Hz	1.0 Gs (0 to peak).

2.8.2.2 Non-operating vibration

The maximum non-operating vibration levels that the drive may experience without incurring physical damage or degradation in performance when subsequently put into operation are specified below.

5–500 Hz	5.0 Gs (0 to peak). Max displacement may apply below 22 Hz.

2.9 Acoustics

Drive emission of sound is measured consistent with the ECMA-74 and its referenced standards. Testing is conducted at room temperature (approximately 25°C). Emission levels are reported as the total A-weighted sound power levers for steady state, idle, and active seeks modes of operation.

Table 7 Drive A-weighted Sound Power Levels (SWL, BA)

	1-disk models
Idle(1)	2.2 bels (typ) 2.4 bels (max)
Performance Seek	2.4 bels (typ) 2.6 bels (max)

1. During periods of drive idle, some offline activity may occur according to the S.M.A.R.T. specification, which may increase acoustic and power to operational levels.

2.9.1 Test for prominent discrete tones (PDTs)

Seagate follows the ECMA-74 standards for measurement and identification of PDTs. An exception to this process is the use of the absolute threshold of hearing. Seagate uses the lower limit for the threshold curve* to discern tone audibility and to compensate for the inaudible components of sound prior to computation of tone ratios according to Annex D of the ECMA-74 standards.

*Defined as the median curve given by ISO 389-7 (Tf curve) minus 10dB at all frequencies.

2.10 Electromagnetic Immunity

When properly installed in a representative host system, the drive operates without errors or degradation in performance when subjected to the radio frequency (RF) environment as defined in **Table 8**.

Table 8 Radio Frequency Environments

Test	Description	Performance Level	Reference Standard
Electrostatic discharge	Contact, HCP, VCP: ± 4 kV; Air: ± 8 kV	B	EN 61000-4-2: 95
Radiated RF immunity	80 to 1GHz, 3 V/m, 80% AM with 1 kHz sine 900 MHz, 3 V/m, 50% pulse modulation @ 200 Hz	A	EN 61000-4-3: 96 ENV 50204: 95
Electrical fast transient	± 1 kV on AC mains, ± 0.5 kV on external I/O	B	EN 61000-4-4: 95
Surge immunity	± 1 kV differential, ± 2 kV common, AC mains	B	EN 61000-4-5: 95
Conducted RF immunity	150 kHz to 80 MHz, 3 Vrms, 80% AM with 1 kHz sine	A	EN 61000-4-6: 97
Power Frequency H-field immunity	1 A/m, 50Hz/60Hz, 3 axes	A	EN 61000-4-8: 97
Voltage dips, interrupts	30% Reduction for 25 cycles >95% Reduction for 250 cycles >95%, 0.5 cycles	C C B	EN 61000-4-11: 94

2.10.1 DC Magnetic Field Immunity

Table 9 DC Magnetic Field Immunity

Test	Product Spec (Standalone)
DC Magnetic Field Immunity [1, 2, 3]	400 Gauss, RMS

[1] Field in Gauss at the drive envelope. Testing per procedures 20800109-349 and 20800109-350.
[2] Passing Field in Gauss at the drive envelope. In practice, testing is conducted using a fixed distance from the bottom of the magnet to the top of the drive. Calibration of the field vs. distance is done with a Hall probe with no magnetic materials present.
[3] Testing to be done with magnet.375" dia. x 0.100" Ni-plated NdFeB; B,~11.5 kG, magnetized along its length; the magnet is oriented with the length perpendicular to the drive cover/PCBA. Drive to be properly secured during test.

2.11 Reliability

Non-recoverable read errors	1 per 10^{14} bits read, max
Load/Unload (U/UL) 30°C, 50% relative humidity	 600,000 software-controlled power on/off cycles 20,000 hard power on/off cycles
Rated workload	Average annualized workload rating: <55 TB/year. The specifications for the product assumes the I/O workload does not exceed the average annualized workload rate limit of 55 TB/year. Workloads exceeding the annualized rate may degrade and impact reliability as experienced by the particular application. The average annualized workload rate limit is in units of TB per calendar year.
Warranty	To determine the warranty for a specific drive, use a web browser to access the following web page: http://www.seagate.com/support/warranty-and-replacements/. From this page, click on the "Is my Drive under Warranty" link. The following are required to be provided: the drive serial number, model number (or part number) and country of purchase. The system will display the warranty information for the drive.

2.11.1 Data loss under power interruption with write cache enabled

Drive preserves its data during all operations except in cases where power to the drive is interrupted during write operations. This could result in either an uncorrected data error being reported, or the entire sector/track becoming unreadable. This can be permanently recovered by rewriting to the same location on the drive. Additionally any data present in the DRAM buffer will not be written to the disk media, additionally, the drive will not be able to return the original data.

In order to prevent this data loss, the host should issue a standby immediate or flush cache command before a controlled power off operation to the drive.

2.12 Agency and Safety Certifications

Each Hard Drive and Solid State Drive ("drives") has a product label that includes certifications that are applicable to that specific drive. The following information provides an overview of requirements that may be applicable to the drive.

2.12.1 Safety certification

These products are certified to meet the requirements of UL/cUL 60950-1, EN 60950-1, and may also include, IEC 62368, UL 62368 and EN 62368.

The security features of Self-Encrypting Drive models are based on the "TCG Storage Architecture Core Specification" and the "TCG Storage Workgroup Security Subsystem Class: Enterprise_A" specification with additional vendor-unique features as noted in this product manual.

2.12.2 Regulatory Models

The following regulatory model number represent all features and configurations within the series:

Regulatory Model Numbers: SDC006

2.12.3 European Union (EU) CE Marking Requirements

Drives that display the CE mark comply with the European Union (EU) requirements specified in the Electromagnetic Compatibility Directive (2014/30/EU) put into force on 20 April 2016. Testing is performed to the levels specified by the product standards for Information Technology Equipment (ITE). Emission levels are defined by EN 55032:2012, Class B and the immunity levels are defined by EN 55024:2010.

The drives also meet the requirements of The Low Voltage Directive (LVD) 2014/35/EU.

Seagate drives are tested in representative end-user systems. Although CE-marked Seagate drives comply with all relevant regulatory requirements and standards for the drives, Seagate cannot guarantee that all system-level products into which the drives are installed comply with all regulatory requirements and standards applicable to the system-level products. The drive is designed for operation inside a properly designed system (e.g., enclosure designed for the drive), with properly shielded I/O cable (if necessary) and terminators on all unused I/O ports. Computer manufacturers and system integrators should confirm EMC compliance and provide CE marking for the system-level products.

For compliance with the RoHS "Recast" Directive 2011/65/EU (RoHS 2), See Section 2.14.1 on page 17.

2.12.4 Australian RCM Compliance Mark

If these models have the RCM marking, they comply with the Australia/New Zealand Standard AS/NZ CISPR32 and meet the Electromagnetic Compatibility (EMC) Framework requirements of the Australian Communication and Media Authority (ACMA).

2.12.5 Canada ICES-003

If this model has the ICES-003:2016 marking it complies with requirements of ICES tested per ANSI C63.4-2014.

2.12.6 South Korean KC Certification Mark

The South Korean KC Certification Mark means the drives comply with paragraph 1 of Article 11 of the Electromagnetic Compatibility control Regulation and meet the Electromagnetic Compatibility (EMC) Framework requirements of the Radio Research Agency (RRA) Communications Commission, Republic of Korea.These drives have been tested and comply with the Electromagnetic Interference/ Electromagnetic Susceptibility (EMI/EMS) for Class B products. Drives are tested in a representative, end-user system by a Korean-recognized lab.

기 종 별	사 용 자 안 내 문
B 급 기기 (가정용 방송통신기자재)	이 기기는 가정용(B 급) 전자파적합기기로서 주로 가정에서 사용하는 것을 목적으로 하며, 모든 지역에서 사용할 수 있습니다.

2.12.7 Morocco Commodity Mark

To satisfy our OEM customers, Seagate has added the Moroccan Commodity Mark to the drives provided to the OEM for the sale of Customer Kits produced by our OEM customers that are intended to be incorporated into the OEM's finished system-level product by an end user. The Customer Kits are considered 'devices' under Morocco's Order of the Minister of Industry, Trade, Investment and Digital Economy No. 2574-14 of 29 Ramadan 1436 (16 July 2015) on electromagnetic compatibility of equipment.

Seagate drives are tested for compliance and complies with the European Union (EU) Electromagnetic Compatibility (EMC) Directive 2014/30/EU and the Low Voltage Directive (LVD) 2014/35/EU. Accordingly, the drives also meets the requirements of Morocco's Order of the Minister of Industry, Trade, Investment and Digital Economy No. 2574-14 of 29 Ramadan 1436 (16 July 2015) on electromagnetic compatibility of equipment.

2.12.8 Taiwanese BSMI

Drives with the Taiwanese certification mark comply with Chinese National Standard, CNS13438.

For compliance with the Taiwan Bureau of Standards, Metrology and Inspection's (BSMI) requirements, See Section 2.14.3 on page 18.

2.13 FCC verification

These drives are intended to be contained solely within a personal computer or similar enclosure (not attached as an external device). As such, each drive is considered to be a subassembly even when it is individually marketed to the customer. As a subassembly, no Federal Communications Commission verification or certification of the device is required.

Seagate has tested this device in enclosures as described above to ensure that the total assembly (enclosure, disk drive, motherboard, power supply, etc.) does comply with the limits for a Class B computing device, pursuant to Subpart J, Part 15 of the FCC rules. Operation with noncertified assemblies is likely to result in interference to radio and television reception.

Radio and television interference. This equipment generates and uses radio frequency energy and if not installed and used in strict accordance with the manufacturer's instructions, may cause interference to radio and television reception.

This equipment is designed to provide reasonable protection against such interference in a residential installation. However, there is no guarantee that interference will not occur in a particular installation. If this equipment does cause interference to radio or television, which can be determined by turning the equipment on and off, users are encouraged to try one or more of the following corrective measures:

- Reorient the receiving antenna.
- Move the device to one side or the other of the radio or TV.
- Move the device farther away from the radio or TV.
- Plug the computer into a different outlet so that the receiver and computer are on different branch outlets.

If necessary, users should consult a dealer or an experienced radio/television technician for additional suggestions. Users may find helpful the following booklet prepared by the Federal Communications Commission: *How to Identify and Resolve Radio-Television Interference Problems*. This booklet is available from the Superintendent of Documents, U.S. Government Printing Office, Washington, DC 20402. Refer to publication number 004-000-00345-4.

2.14 Environmental protection

Seagate designs its products to meet environmental protection requirements worldwide, including regulations restricting certain chemical substances.

2.14.1 European Union Restriction of Hazardous Substance Law

2.14.1.1 Restriction of Hazardous Substances in Electrical and Electronic Equipment

Seagate drives are designed to be compliant with the European Union RoHS "Recast" Directive 2011/65/EU (RoHS 2) as amended by Directive (EU) 2015/863. The RoHS2 restricts the use of certain hazardous substances such as Lead, Cadmium, Mercury, Hexavalent Chromium, Polybrominated Biphenyls (PBB) and Polybrominated Diphenyl Ether (PBDE), BisBis(2-Ethylhexyl) phthalate (DEHP), Benzyl butyl phthalate (BBP), Dibutyl phthalate (DBP), and Diisobutyl phthalate (DIBP) in electrical and electronic equipment (EEE).

2.14.1.2 Substances of Very High Concern (SVHC)

The European Union REACH (Registration, Evaluation, Authorization and Restriction of Chemicals) Regulation (EC) 1907/2006 regulates chemicals shipped into and used in Europe. A number of parts and materials in Seagate products are procured from external suppliers. We rely on the representations of our suppliers regarding the presence of REACH substances in these articles and materials. Our supplier contracts require compliance with our chemical substance restrictions, and our suppliers document their compliance with our requirements by providing full-disclosure material content declarations that disclose inclusion of any REACH-regulated substance in such articles or materials. Product-specific REACH declarations are available upon request through your Seagate Sales Representative.

2.14.2 China Requirements —China RoHS 2

China RoHS 2 refers to the Ministry of Industry and Information Technology Order No. 32, effective July 1, 2016, titled Management Methods for the Restriction of the Use of Hazardous Substances in Electrical and Electronic Products. To comply with China RoHS 2, Seagate determines this product's Environmental Protection Use Period (EPUP) to be 20 years in accordance with the *Marking for the Restricted Use of Hazardous Substances in Electronic and Electrical Products,* SJT 11364-2014.

Table 10 China - Hazardous Substances

部件名称 Part Name	有害物质 Hazardous Substances					
	铅 (Pb)	汞 (Hg)	镉 (Cd)	六价铬 (Cr^{+6})	多溴联苯 (PBB)	多溴二苯醚 (PBDE)
硬盘驱动器 HDD	X	O	O	O	O	O
印刷电路板组装 PCBA	X	O	O	O	O	O

本表格依据 SJ/T 11364 的规定编制。

This table is prepared in accordance with the provisions of SJ/T 11364-2014

O：表示该有害物质在该部件所有均质材料中的含量均在 GB/T 26572 规定的限量要求以下。

O：Indicates that the hazardous substance contained in all of the homogeneous materials for this part is below the limit requirement of GB/T26572.

X：表示该有害物质至少在该部件的某一均质材料中的含量超出 GB/T 26572 规定的限量要求。

X：Indicates that the hazardous substance contained in at least one of the homogeneous materials used for this part is above the limit requirement of GB/T26572.

2.14.3 Taiwan Requirements — Taiwan RoHS

Taiwan RoHS refers to the Taiwan Bureau of Standards, Metrology and Inspection's (BSMI) requirements in standard CNS 15663, Guidance to reduction of the restricted chemical substances in electrical and electronic equipment. Seagate products must comply with the "Marking of presence" requirements in Section 5 of CNS 15663, effective January 1, 2018. This product is Taiwan RoHS compliant.

The following table meets the Section 5 of CNS 15663, "Marking of presence" requirements.

Table 11 Taiwan - Restricted Substances

設備名稱：硬碟設備，型號： Equipment Name: Hard Disk Device, Type Designation:						
單元 Unit	限用物質及其化學符號 Restricted Substance and its chemical symbol					
	鉛 (Pb)	汞 (Hg)	鎘 (Cd)	六價鉻 (Cr+6)	多溴聯苯 (PBB)	多溴二苯醚 (PBDE)
頂蓋 Top Cover	—	O	O	O	O	O
磁碟 Magnetic disk	—	O	O	O	O	O
電機底座組件 Motor Base Assembly	—	O	O	O	O	O
印刷電路板组装 PCB Assembly	—	O	O	O	O	O

備考 1. "O" 係指該項限用物質之百分比含量未超出百分比含量基準值。

Note 1. "O" indicates that the percentage content of the restricted substance does not exceed the percentage of reference value of presence.

備考 2. "—" 係指該項限用物質為排除項目。

Note 2. "—" indicates that the restricted substance corresponds to the exemption.

2.15 Reference documents

SCSI Commands Reference Manual
Seagate part number: 100293068

Self-Encrypting Drives Reference Manual
Seagate part number: 100515636

ANSI Small Computer System Interface (SCSI) Documents
INCITS 515 SCSI Architecture Model (SAM-5) Rev. 11

Trusted Computing Group (TCG) Documents (apply to Self-Encrypting Drive models only)
TCG Storage Architecture Core Specification, Rev. 1.0
TCG Storage Security Subsystem Class Enterprise Specification, Rev. 1.0

Specification for Acoustic Test Requirement and Procedures
Seagate part number: 30553-001

In case of conflict between this document and any referenced document, this document takes precedence.

2.15 Corrosive Environment

Seagate electronic drive components pass accelerated corrosion testing equivalent to 10 years exposure to light industrial environments containing sulfurous gases, chlorine and nitric oxide, classes G and H per ASTM B845. However, this accelerated testing cannot duplicate every potential application environment.

Users should use caution exposing any electronic components to uncontrolled chemical pollutants and corrosive chemicals as electronic drive component reliability can be affected by the installation environment. The silver, copper, nickel and gold films used in Seagate products are especially sensitive to the presence of sulfide, chloride, and nitrate contaminants. Sulfur is found to be the most damaging. In addition, electronic components should never be exposed to condensing water on the surface of the printed circuit board assembly (PCBA) or exposed to an ambient relative humidity greater than 95%. Materials used in cabinet fabrication, such as vulcanized rubber, that can outgas corrosive compounds should be minimized or eliminated. The useful life of any electronic equipment may be extended by replacing materials near circuitry with sulfide-free alternatives.

Seagate recommends that data centers be kept clean by monitoring and controlling the dust and gaseous contamination. Gaseous contamination should be within ANSI/ISA S71.04-2013 G2 classification levels (as measured on copper and silver coupons), and dust contamination to ISO 14644-1 Class 8 standards, and MTBF rated conditions as defined in the Annualized Failure Rate (AFR) and Mean Time Between Failure (MTBF) section.

3.0 Configuring and Mounting the Drive

This section contains the specifications and instructions for configuring and mounting the drive.

3.1 Handling and Static-Discharge Precautions

After unpacking, and before installation, the drive may be exposed to potential handling and electrostatic discharge (ESD) hazards. Observe the following standard handling and static-discharge precautions.

CAUTION	• Keep the drive in the electrostatic discharge (ESD) bag until ready for installation to limit the drive's exposure to ESD. • Before handling the drive, put on a grounded wrist strap, or ground yourself frequently by touching the metal chassis of a computer that is plugged into a grounded outlet. Wear a grounded wrist strap throughout the entire installation procedure. • Handle the drive by its edges or frame *only*. • The drive is extremely fragile—handle it with care. Do not press down on the drive top cover. • Always rest the drive on a padded, antistatic surface until mounting it in the computer. • Do not touch the connector pins or the printed circuit board. • Do not remove the factory-installed labels from the drive or cover them with additional labels. Removal voids the warranty. Some factory-installed labels contain information needed to service the drive. Other labels are used to seal out dirt and contamination.

3.2 Configuring the Drive

Each drive on the Serial ATA interface connects in a point-to-point configuration with the Serial ATA host adapter. There is no master/slave relationship because each drive is considered a master in a point-to-point relationships. If two drives are attached on one Serial ATA host adapter, the host operating system views the two devices as if they were both "masters" on two separate ports. Both drives behave as if they are Device 0 (master) devices.

3.2.1 Serial ATA Cables and Connectors

The Serial ATA interface cable consists of four conductors in two differential pairs, plus three ground connections. The cable size may be 30 to 26 AWG with a maximum length of one meter (39.37 in). Refer to **Table 12** for connector pin definitions. Either end of the SATA signal cable can be attached to the drive or host.

For direct backplane connection, the drive connectors are inserted directly into the host receptacle. The drive and the host receptacle incorporate features that enable the direct connection to be hot pluggable and blind mateable. For installations which require cables, users can connect the drive as shown in **Figure 1**.

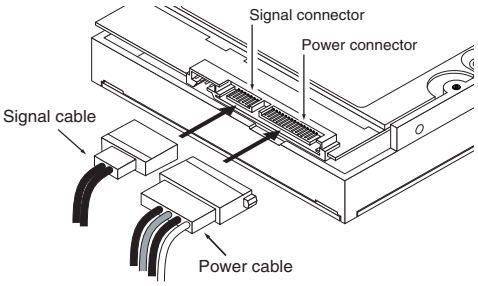

Figure 1 Attaching SATA Cabling

Each cable is keyed to ensure correct orientation.

3.3 Drive Mounting

Users can mount the drive in any orientation using four screws in the side-mounting holes or four screws in the bottom-mounting holes. Refer to **Figure 2** and **Figure 3** for drive mounting dimensions. Follow these important mounting precautions when mounting the drive:

- Allow a minimum clearance of 0.030 in (0.76 mm) around the entire perimeter of the drive for cooling.
- Use only M3 x 0.5 mounting screws.
- Do not overtighten the mounting screws. Maximum torque: 4.0 in-lb (0.4519 N-m).
- Four (4) threads (0.080 in, 2.032 mm) minimum screw engagement recommended.
- Avoid excessive drive distortion when mounting. Refer to the following specifications for stiffness/deflection information:

Top cover stiffness/deflection	
Operating: no performance degradation, emitted noise, mechanical damage, or hard errors	10 mm probe: 2.0kgf (typical)
Non-operating: no hard errors	10 mm probe: maximum 2.0kgf (instantaneous)

Figure 2 Mounting Dimensions (for 1-disk models)

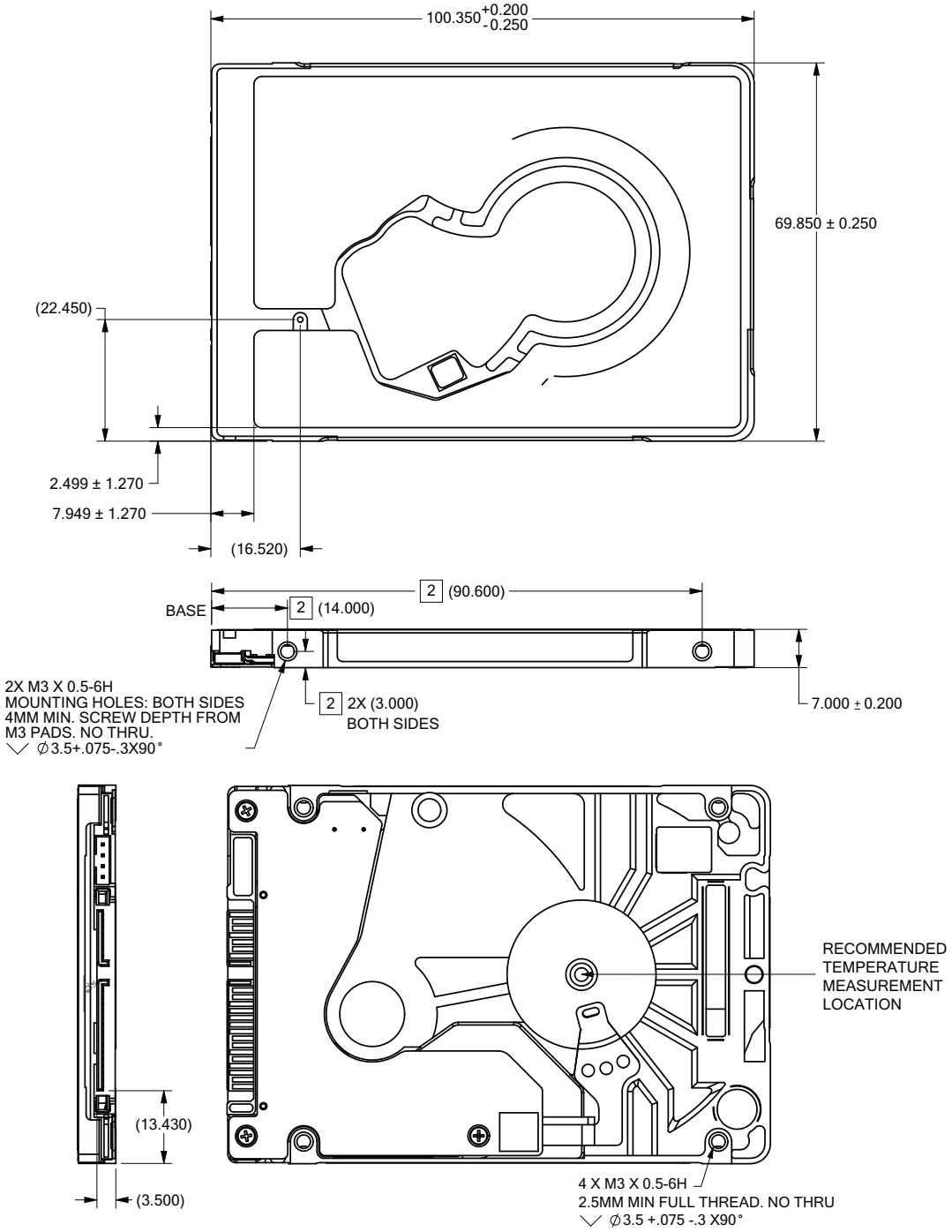

Figure 3 Mounting Dimensions (for 1-disk models) (alternate basedeck)

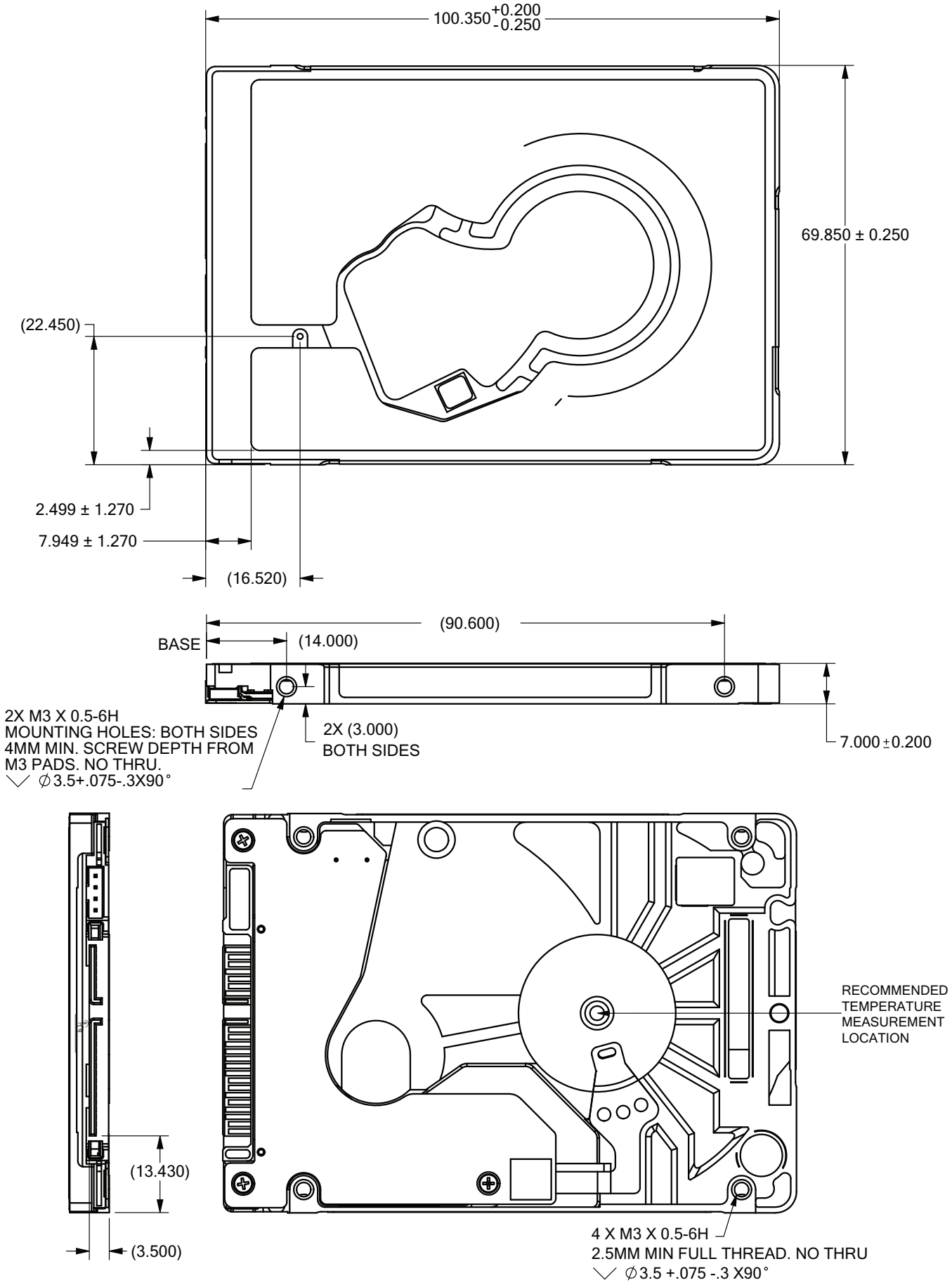

4.0 About FIPS

The Federal Information Processing Standard (FIPS) Publication 140-2, FIPS PUB 140-2, is a U.S. government computer security standard used to accredit cryptographic modules. It is titled “Security Requirements for Cryptographic Modules”. The initial publication was on May 25, 2001 and was last updated December 3, 2002.

Purpose.

The National Institute of Standards and Technology (NIST) issued the FIPS 140 Publication Series to coordinate the requirements and standards for cryptography modules that include both hardware and software components.

Federal Information Processing Standard (FIPS) 140-2 Level 2 Certification requires drives to go through government agencies certifications to add requirements for physical tamper-evidence and role-based authentication. For more information, refer to 'Security Rules' section in the 'Security Policy' document uploaded on the NIST website. To reference the product certification visit: http://csrc.nist.gov/groups/STM/cmvp/documents/140-1/1401vend.htm, and search for “Seagate”.

Security Level 2.

Security Level 2 enhances the physical security mechanisms of a Security Level 1 cryptographic module by adding the requirement for tamper-evidence, which includes the use of tamper-evident coatings or seals on removable covers of the module. Tamper-evident coatings or seals are placed on a cryptographic module so that the coating or seal must be broken to attain physical access to the critical security parameters (CSP) within the module. Tamper-evident seals (example shown in **Figure 4 on page 23**) are placed on covers to protect against unauthorized physical access. In addition Security Level 2 requires, at a minimum, role-based authentication in which a cryptographic module authenticates the authorization of an operator to assume a specific role and perform a corresponding set of services.

Figure 4 Example of FIPS tamper evidence labels.

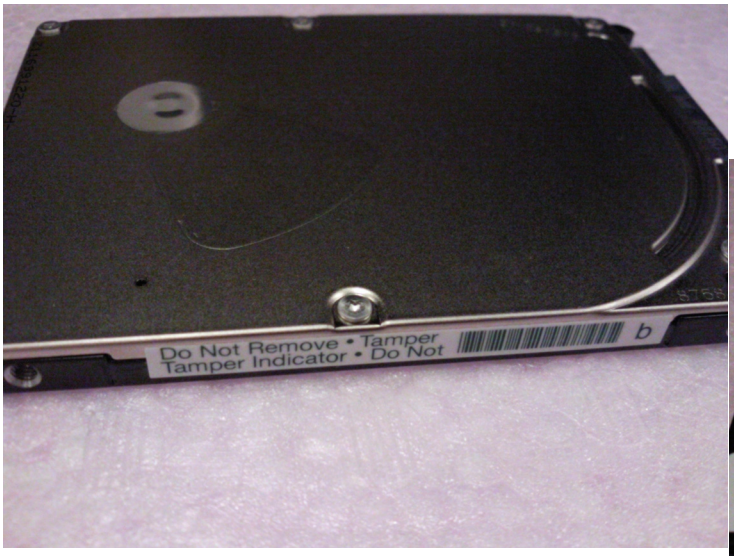

Note	For reference only. May not represent actual drive.

5.0 About (SED) Self-Encrypting Drives

Self-encrypting drives (SEDs) offer encryption and security services for the protection of stored data, commonly known as "protection of data at rest." These drives are compliant with the Trusted Computing Group (TCG) Opal Storage Specifications as detailed in the following:

Trusted Computing Group (TCG) Documents (apply to Self-Encrypting Drive models only)
TCG Storage Architecture Core Specification, Version 2.0
TCG Storage Security Subsystem Class Opal Specification, Version 2.0
(see www.trustedcomputinggroup.org)

In case of conflict between this document and any referenced document, this document takes precedence.

The Trusted Computing Group (TCG) is an organization sponsored and operated by companies in the computer, storage and digital communications industry. Seagate's SED models comply with the standards published by the TCG.

To use the security features in the drive, the host must be capable of constructing and issuing the following two SATA commands:

- Trusted Send
- Trusted Receive

These commands are used to convey the TCG protocol to and from the drive in their command payloads.

5.1 Data Encryption

Encrypting drives use one inline encryption engine for each drive employing AES-256 data encryption in Cipher Block Chaining (CBC) mode to encrypt all data prior to being written on the media and to decrypt all data as it is read from the media. The encryption engine is always in operation and cannot be disabled.

The 32-byte Data Encryption Key (DEK) is a random number which is generated by the drive, never leaves the drive, and is inaccessible to the host system. The DEK is itself encrypted when it is stored on the media and when it is in volatile temporary storage (DRAM) external to the encryption engine. A unique data encryption key is used for each of the drive's possible16 data bands (see **Section 5.5, Data Bands**).

5.2 Controlled Access

The drive has two security providers (SPs) called the "Admin SP" and the "Locking SP." These act as gatekeepers to the drive security services. Security-related commands will not be accepted unless they also supply the correct credentials to prove the requester is authorized to perform the command.

5.2.1 Admin SP

The Admin SP allows the drive's owner to enable or disable firmware download operations (see **Section 5.4, Drive Locking**). Access to the Admin SP is available using the SID (Secure ID) password or the MSID (Manufacturers Secure ID) password.

5.2.2 Locking SP

The Locking SP controls read/write access to the media and the cryptographic erase feature. Access to the Locking SP is available using the Admin or User passwords.

5.2.3 Default password

When the drive is shipped from the factory, all passwords are set to the value of MSID. This 32-byte random value can only be read by the host electronically over the interface. After receipt of the drive, it is the responsibility of the owner to use the default MSID password as the authority to change all other passwords to unique owner-specified values.

5.2.4 ATA Enhanced Security

The drive can utilize the system's BIOS through the ATA Security API for cases that do not require password management and additional security policies.

Furthermore, the drive's ATA Security Erase Unit command shall support both Normal and Enhanced Erase modes with the following modifications/ additions:

Normal Erase: Normal erase feature shall be performed by changing the Data Encryption Key (DEK) of the drive, followed by an overwrite operation that repeatedly writes a single sector containing random data to the entire drive. This write operation bypasses the media encryption. On reading back the overwritten sectors, the host will receive a decrypted version, using the new DEK of the random data sector (the returned data will not match what was written).

Enhanced Erase: Enhanced erase shall be performed by changing the Data Encryption Key of the drive.

5.3 Random Number Generator (RNG)

The drive has a 32-byte hardware RNG that it is uses to derive encryption keys or, if requested to do so, to provide random numbers to the host for system use, including using these numbers as Authentication Keys (passwords) for the drive's Admin and Locking SPs.

5.4 Drive Locking

In addition to changing the passwords, as described in **Section 5.2.3, Default password**, the owner should also set the data access controls for the individual bands.

The variable "LockOnReset" should be set to "PowerCycle" to ensure that the data bands will be locked if power is lost. In addition "ReadLockEnabled" and "WriteLockEnabled" must be set to true in the locking table in order for the bands "LockOnReset" setting of "PowerCycle" to actually lock access to the band when a "PowerCycle" event occurs. This scenario occurs if the drive is removed from its cabinet. The drive will not honor any data read or write requests until the bands have been unlocked. This prevents the user data from being accessed without the appropriate credentials when the drive has been removed from its cabinet and installed in another system.

5.5 Data Bands

When shipped from the factory, the drive is configured with a single data band called Band 0 (also known as the Global Data Band) which comprises LBA 0 through LBA max. The host may allocate additional bands (Band1 to Band15) by specifying a start LBA and an LBA range. The real estate for this band is taken from the Global Band.

Data bands cannot overlap but they can be sequential with one band ending at LBA (x) and the next beginning at LBA (x+1).

Each data band has its own drive-generated encryption key. The host may change the Encryption Key (see **Section 5.6, Cryptographic Erase**) or the password when required. The bands should be aligned to 4K LBA boundaries.

5.6 Cryptographic Erase

A significant feature of SEDs is the ability to perform a cryptographic erase. This involves the host telling the drive to change the data encryption key for a particular band. Once changed, the data is no longer recoverable since it was written with one key and will be read using a different key. Since the drive overwrites the old key with the new one, and keeps no history of key changes, the user data can never be recovered. This is tantamount to an instantaneous data erase and is very useful if the drive is to be scrapped or redispositioned.

5.7 Authenticated Firmware Download

In addition to providing a locking mechanism to prevent unwanted firmware download attempts, the drive also only accepts download files which have been cryptographically signed by the appropriate Seagate Design Center.

Three conditions must be met before the drive will allow the download operation:

1. The download must be an SED file. A standard (base) drive (non-SED) file will be rejected.
2. The download file must be signed and authenticated.
3. As with a non-SED drive, the download file must pass the acceptance criteria for the drive. For example it must be applicable to the correct drive model, and have compatible revision and customer status.

5.8 Power Requirements

The standard drive models and the SED drive models have identical hardware, however the security and encryption portion of the drive controller ASIC is enabled and functional in the SED models. This represents a small additional drain on the 5V supply of about

30mA and a commensurate increase of about 150mW in power consumption. There is no additional drain on the 12V supply. See the tables in **Section 2.7, Power Specifications** for power requirements on the standard (non-SED) drive models.

5.9 Supported Commands

The SED models support the following two commands in addition to the commands supported by the standard (non-SED) models as listed in **Table 13**:

- Trusted Send
- Trusted Receive

5.10 RevertSP

SED models will support the RevertSP feature which erases all data in all bands on the device and returns the contents of all SPs (Security Providers) on the device to their original factory state. In order to execute the RevertSP method the unique PSID (Physical Secure ID) printed on the drive label must be provided. PSID is not electronically accessible and can only be manually read from the drive label or scanned in via the 2D barcode.

6.0 Serial ATA (SATA) Interface

These drives use the industry-standard Serial ATA interface that supports FIS data transfers. It supports ATA programmed input/output (PIO) modes 0–4; multiword DMA modes 0–2, and Ultra DMA modes 0–6. The drive also supports the use of the IORDY signal to provide reliable high-speed data transfers.

For detailed information about the Serial ATA interface, refer to the *Serial ATA: High Speed Serialized AT Attachment* specification.

6.1 Hot-Plug Compatibility

BarraCuda Pro drives incorporate connectors which enable users to hot plug these drives in accordance with the Serial ATA: High Speed Serialized AT Attachment specification revision 2.0. This specification can be downloaded from www.serialata.org. This device requires a COMRESET from the host after a hotplug event.

6.2 Serial ATA Device Plug Connector Pin Definitions

Table 12 summarizes the signals on the Serial ATA interface and power connectors. Refer to the **Notes** below.

Table 12 Serial ATA Connector Pin Definitions

Segment	Pin	Function	Definition
Signal	S1	Ground	2nd mate
	S2	A+	Differential signal pair A from Phy
	S3	A-	
	S4	Ground	2nd mate
	S5	B-	Differential signal pair B from Phy
	S6	B+	
	S7	Ground	2nd mate
Key and spacing separate signal and power segments			
Power	P1	V33	3.3V power
	P2	V33	3.3V power
	P3	V33	3.3V power, pre-charge, 2nd mate
	P4	Ground	1st mate
	P5	Ground	2nd mate
	P6	Ground	2nd mate
	P7	V5	5V power, pre-charge, 2nd mate
	P8	V5	5V power
	P9	V5	5V power
	P10	Ground	2nd mate
	P11	Ground or LED signal	If grounded, drive does not use deferred spin
	P12	Ground	1st mate
	P13	V12	12V power, pre-charge, 2nd mate
	P14	V12	12V power
	P15	V12	12V power

Notes

1. All pins are in a single row, with a 1.27 mm (0.050 in) pitch.
2. The comments on the mating sequence apply to the case of backplane blindmate connector only. In this case, the mating sequences are:
   - the ground pins P4 and P12.
   - the pre-charge power pins and the other ground pins.
   - the signal pins and the rest of the power pins.
3. There are three power pins for each voltage. One pin from each voltage is used for pre-charge when installed in a blind-mate backplane configuration.
4. All used voltage pins (V_x) must be terminated.

6.3 Supported ATA Commands

Table 13 lists Serial ATA standard commands that the drive supports. For a detailed description of the ATA commands, refer to the *Serial ATA International Organization: Serial ATA* (Revision 2.6). Refer to www.sata-io.org.

Refer to **S.M.A.R.T. commands** on page 33 for details and subcommands used in the S.M.A.R.T. implementation.

Table 13 Supported ATA commands

ATA-standard commands names	Command code (in hex)	
Device Configuration Restore	B1h/C0h	
Device Configuration Freeze Lock	B1h/C1h	
Device Configuration Identify	B1h/C2h	
Device Configuration Set	B1h/C3h	
Download Microcode	92h	
Execute Device Diagnostics	90h	
Flush Cache	E7h	
Flush Cache Extended	EAh	
Identify Device	ECh	
Initialize Device Parameters	91h	
Read Buffer	E4h	
Read DMA	C8h	
Read DMA Extended	25h	
Read DMA without Retries	C9h	
Read Long with Retries	22h	
Read Long without Retries	23h	
Read Multiple	C4h	
Read Multiple Extended	29h	
Read Native Max Address	F8h	
Read Native Max Address Extended	27h	
Read Sectors	20h	
Read Sectors Extended	24h	
Read Sectors without Retries	21h	
Read Verify Sectors	40h	
Read Verify Sectors Extended	42h	
Read Verify Sectors without Retries	41h	
Seek	70h	
Set Features	EFh	
Set Max Address	F9h	
Note: Individual Set Max commands are identified by the value placed in the Set Max Features register as defined to the right.	Address: Password: Lock: Unlock: Freeze Lock:	00_H 01_H 02_H 03_H 04_H
Set Max Address Ext	37h	
Set Multiple Mode	C6h	
S.M.A.R.T. Disable Operations	B0h/D9h	
S.M.A.R.T. Enable/Disable Autosave	B0h/D2h	

Table 13 Supported ATA commands

ATA-standard commands names	Command code (in hex)
S.M.A.R.T. Enable Operations	B0h/D8h
S.M.A.R.T. Enable/Disable Auto Offline	B0h/DBh
S.M.A.R.T. Enable One Attribute Modification	B0h/E0h
S.M.A.R.T. Execute Offline	B0h/D4h
S.M.A.R.T. Free Fall Protection Host Interface	FEh
S.M.A.R.T. Read Attribute Thresholds	B0h/D1h
S.M.A.R.T. Read Data	B0h/D0h
S.M.A.R.T. Read Log Sector	B0h/D5h
S.M.A.R.T. Return Status	B0h/DAh
S.M.A.R.T. Save Attribute Values	B0h/D3h
S.M.A.R.T. Write Attribute Thresholds	B0h/D7h
S.M.A.R.T. Write Attribute Values	B0h/E1h
S.M.A.R.T. Write Log Sector	B0h/D6h
Trusted Receive	5Ch (SED only)
Trusted Receive DMA	5Dh (SED only)
Trusted Send	5Eh (SED only)
Trusted Send DMA	5Fh (SED only)
Write Buffer	E8h
Write DMA	CAh
Write DMA Extended	35h
Write DMA without Retries	CBh
Write Long with Retries	32h
Write Long without Retries	33h
Write Multiple	C5h
Write Multiple Extended	39h
Write Sectors	30h, 31h
Write Sectors Extended	34h
ATA-standard power-management commands	
Check Power Mode	E5h
Idle	E3h
Idle Immediate	E1h
Sleep	E6h
Standby	E2h
Standby Immediate	E0h
ATA-standard security commands	
Security Set Password	F1h
Security Unlock	F2h
Security Erase Prepare	F3h
Security Erase Unit	F4h
Security Freeze Lock	F5h

Table 13 Supported ATA commands

ATA-standard commands names	Command code (in hex)
Security Disable Password	F6h

6.3.1 Identify Device command

The Identify Device command (command code EC_H) transfers information about the drive to the host following power up. The data is organized as a single 512-byte block of data, whose contents are shown in **Table 14**. All reserved bits or words should be set to zero. Parameters listed with an "x" are drive-specific or vary with the state of the drive. Refer to **Drive Specifications** on page 8 for default parameter settings.

The following commands contain drive-specific features that may not be included in the Serial ATA specification.

Table 14 Identify Device command

Word	Description	Value
0	Configuration information: • Bit 15: 0 = ATA; 1 = ATAPI • Bit 7: removable media • Bit 6: removable controller • Bit 0: reserved	$0C5A_H$
1	Number of logical cylinders	16,383
2	Specific configuration	C837H
3	Number of logical heads	16
4	Retired	0000_H
5	Retired	0000_H
6	Number of logical sectors per logical track: 63	$003F_H$
7–9	Retired	0000_H
10–19	Serial number: (20 ASCII characters, 0000_H = none)	ASCII
20	Retired	0000_H
21	Retired	8000_H
22	Obsolete	0004_H
23–26	Firmware revision: (8 ASCII character string, padded with blanks to end of string)	x.xx
27–46	Drive model number: (40 ASCII characters, padded with blanks to end of string)	ST1000LM049 ST1000LM050 ST500LM034 ST500LM035 ST500LM036
47	(Bits 7–0) Maximum sectors per interrupt on Read multiple and Write multiple (16)	8010_H
48	Trusted Computing Feature set options	4001_H
49	Standard Standby timer, IORDY supported and may be disabled	$2F00_H$
50	Capabilities	4000_H
51	PIO data-transfer cycle timing mode	0200_H
52	Retired	0200_H
53	Words 54–58, 64–70 and 88 are valid	0007_H
54	Number of current logical cylinders	$xxxx_H$
55	Number of current logical heads	$xxxx_H$
56	Number of current logical sectors per logical track	$xxxx_H$
57–58	Current capacity in sectors	$xxxx_H$

Table 14 Identify Device command

Word	Description	Value
59	Number of sectors transferred during a Read Multiple or Write Multiple command	$xxxx_H$
60–61	Total number of user-addressable sectors This field contains a value that is one greater than the total number of user-addressable sectors. The maximum value that shall be placed in this field is 0FFFFFFFh. The 0FFFFFFFh value applies to all capacities over 137GB (see **Section 2.1, Formatted Capacity** for related information).	ST1000LM049 = 0FFFFFFFh ST1000LM050 = 0FFFFFFFh ST500LM034 = 0FFFFFFFh ST500LM035 = 0FFFFFFFh ST500LM036 = 0FFFFFFFh
62	Retired	0000_H
63	Multiword DMA active and modes supported (see note following this table)	$xx07_H$
64	Advanced PIO modes supported (modes 3 and 4 supported)	0003_H
65	Minimum multiword DMA transfer cycle time per word (120 ns)	0078_H
66	Recommended multiword DMA transfer cycle time per word (120 ns)	0078_H
67	Minimum PIO cycle time without IORDY flow control (240 ns)	0078_H
68	Minimum PIO cycle time with IORDY flow control (120 ns)	0078_H
69	Additional Supported bits Bit 4 means Device Encrypts All User Data on the device. Bit 7 means IEEE1667 protocol is supported.	$xx1x_H$ or $xx9x_H$
70–74	ATA-reserved	0000_H
75	Queue depth	$001F_H$
76	Serial ATA capabilities	$0D06_H$
77	ATA-reserved	0000_H
78	Serial ATA features supported	0048_H
79	Serial ATA features enabled	0048_H
80	Major version number	$01F0_H$
81	Minor version number	0029_H
82	Command sets supported	$746B_H$
83	Command sets supported	$7D69_H$
84	Command sets support extension	$61E3_H$
85	Command sets enabled	7469
86	Command sets enabled	$BC49_H$
87	Command sets enable extension	$61E3_H$
88	Ultra DMA support and current mode (see note following this table)	$xx7F_H$
89	Security erase time	$xxxx_H$
90	Enhanced security erase time	$xxxx_H$
91	Current APM values	8080_H
92	Master password revision code	$FFFE_H$
93	Hardware reset value (see description following this table)	$xxxx_H$
94	Auto acoustic management setting	$xxxx_H$
95	Stream Min. Request Size	0000_H
96	Streaming Transfer Time - DMA	0000_H
97	Streaming Access Latency - DMA and PIO	0000_H

Table 14 Identify Device command

Word	Description	Value
98-99	Streaming Performance Granularity	0000_H
100–103	Total number of user-addressable LBA sectors available (see **Section 3.2, Configuring the Drive** for related information) These words are required for drives that support the 48-bit addressing feature. Maximum value: 0000FFFFFFFFFFFFh.	ST1000LM049 = 1,953,525,168 ST1000LM050 = 1,953,525,168 ST500LM034 = 976,773,168 ST500LM035 = 976,773,168 ST500LM036 = 976,773,168
104	Streaming Transfer Time - PIO	0000_H
105	Reserved	0000_H
106	Physical sector size / Logical sector size	6003_H
107	Seagate reserved	0000_H
108-111	The mandatory value of the world wide name (WWN) for the drive. **NOTE:** This field is valid if word 84, bit 8 is set to 1 indicating 64-bit WWN support.	Each drive will have a unique value.
112-118	ATA-reserved	0000_H
119	Free Fall Protection support (bit 5)	1 = Free Fall Protection supported 0 = Free Fall Protection not supported
120	Free Fall Protection enable/disable (bit 5)	1 = Free Fall Protection feature is enabled 0 = Free Fall Protection feature is disabled
121–127	ATA-reserved	0000_H
128	Security status	0021_H
129–159	Seagate-reserved	$xxxx_H$
160–221	ATA-reserved	0000_H
222	Transport major version number	$101F_H$
223–254	ATA-reserved	0000_H
255	Integrity word	$xxA5_H$

Note	See the bit descriptions below for words 63, 88 and 93 of the Identify Drive data. (on next page)

Table 15 Bit Descriptions

Description (if bit is set to 1)	
Bit	**Word 63**
0	Multiword DMA mode 0 is supported.
1	Multiword DMA mode 1 is supported.
2	Multiword DMA mode 2 is supported.
8	Multiword DMA mode 0 is currently active.
9	Multiword DMA mode 1 is currently active.
10	Multiword DMA mode 2 is currently active.
Bit	**Word 88**
0	Ultra DMA mode 0 is supported.
1	Ultra DMA mode 1 is supported.
2	Ultra DMA mode 2 is supported.
3	Ultra DMA mode 3 is supported.
4	Ultra DMA mode 4 is supported.
5	Ultra DMA mode 5 is supported.
6	Ultra DMA mode 6 is supported.
8	Ultra DMA mode 0 is currently active.
9	Ultra DMA mode 1 is currently active.
10	Ultra DMA mode 2 is currently active.
11	Ultra DMA mode 3 is currently active.
12	Ultra DMA mode 4 is currently active.
13	Ultra DMA mode 5 is currently active.
14	Ultra DMA mode 6 is currently active.
Bit	**Word 93**
13	1 = 80-conductor cable detected, CBLID above VIH 0 = 40-conductor cable detected, CBLID below VIL

6.3.2 Set Features command

This command controls the implementation of various features that the drive supports. When the drive receives this command, it sets BSY, checks the contents of the Features register, clears BSY and generates an interrupt. If the value in the register does not represent a feature that the drive supports, the command is aborted. Power-on default has the read look-ahead and write caching features enabled.

The acceptable values for the Features register are defined as follows:

Table 16 Set Features command values

02_H	Enable write cache *(default)*.

Table 16 Set Features command values (continued)

03_H	Set transfer mode (based on value in Sector Count register). Sector Count register values: 00_H Set PIO mode to default (PIO mode 2). 01_H Set PIO mode to default and disable IORDY (PIO mode 2). 08_H PIO mode 0 09_H PIO mode 1 $0A_H$ PIO mode 2 $0B_H$ PIO mode 3 $0C_H$ PIO mode 4 *(default)* 20_H Multiword DMA mode 0 21_H Multiword DMA mode 1 22_H Multiword DMA mode 2 40_H Ultra DMA mode 0 41_H Ultra DMA mode 1 42_H Ultra DMA mode 2 43_H Ultra DMA mode 3 44_H Ultra DMA mode 4 45_H Ultra DMA mode 5 46_H Ultra DMA mode 6
55_H	Disable read look-ahead (read cache) feature.
82_H	Disable write cache
AA_H	Enable read look-ahead (read cache) feature *(default)*.
$C1_H$	Disable the Free Fall Protection feature (41_H above enables the Free Fall Protection feature)
$F1_H$	Report full capacity available

Note	At power-on, or after a hardware or software reset, the default values of the features are as indicated above

6.3.3 S.M.A.R.T. commands

S.M.A.R.T. provides near-term failure prediction for disk drives. When S.M.A.R.T. is enabled, the drive monitors predetermined drive attributes that are susceptible to degradation over time. If self-monitoring determines that a failure is likely, S.M.A.R.T. makes a status report available to the host. Not all failures are predictable. S.M.A.R.T. predictability is limited to the attributes the drive can monitor. For more information on S.M.A.R.T. commands and implementation, see the *Draft ATA-5 Standard.*

SeaTools diagnostic software activates a built-in drive self-test (DST S.M.A.R.T. command for $D4_H$) that eliminates unnecessary drive returns. The diagnostic software ships with all new drives and is also available at:
http://www.seagate.com/support/downloads/seatools/.

This drive is shipped with S.M.A.R.T. features disabled. Users must have a recent BIOS or software package that supports S.M.A.R.T. to enable this feature. The table below shows the S.M.A.R.T. command codes that the drive uses.

Table 17 S.M.A.R.T. Commands

Code in features register	S.M.A.R.T. command
$D0_H$	S.M.A.R.T. Read Data
$D2_H$	S.M.A.R.T. Enable/Disable Attribute Autosave
$D3_H$	S.M.A.R.T. Save Attribute Values
$D4_H$	S.M.A.R.T. Execute Off-line Immediate (runs DST)
$D5_H$	S.M.A.R.T. Read Log Sector
$D6_H$	S.M.A.R.T. Write Log Sector
$D8_H$	S.M.A.R.T. Enable Operations
$D9_H$	S.M.A.R.T. Disable Operations
DA_H	S.M.A.R.T. Return Status

Note	If an appropriate code is not written to the Features Register, the command is aborted and 0*x*04 (abort) is written to the Error register.

Seagate Technology LLC
AMERICAS Seagate Technology LLC 10200 South De Anza Boulevard, Cupertino, California 95014, United States, 408-658-1000
ASIA/PACIFIC Seagate Singapore International Headquarters Pte. Ltd. 7000 Ang Mo Kio Avenue 5, Singapore 569877, 65-6485-3888
EUROPE, MIDDLE EAST AND AFRICA Seagate Technology SAS 16-18 rue du Dôme, 92100 Boulogne-Billancourt, France, 33 1-4186 10 00

Publication Number: 100818135, Rev. H
August 2018