Seagate

Cheetah X15 Disc Drive:

ST318451LW/LC

ST39251LC

Product Manual, Volume 1

Cheetah X15 Disc Drive:

ST318451LW/LC

ST39251LC

Product Manual, Volume 1

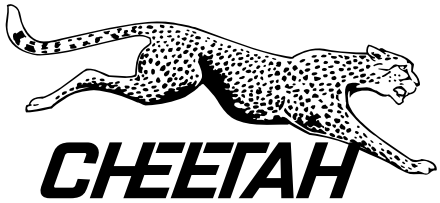

© 2000 Seagate Technology, LLC. All rights reserved
Publication number: 83329484, Rev. C
July 2000

Seagate, Seagate Technology, and the Seagate logo are registered trademarks of Seagate Technology, LLC. Cheetah, SeaFAX, SeaFONE, SeaBOARD, and SeaTDD are either trademarks or registered trademarks of Seagate Technology, LLC. or one of its subsidiaries. All other trademarks or registered trademarks are the property of their respective owners.

Seagate reserves the right to change, without notice, product offerings or specifications. No part of this publication may be reproduced in any form without written permission of Seagate Technology, LLC.

Revision status summary sheet

Revision	Date	Writer/Engineer	Sheets Affected
Rev. B (Class A Release)	05/01/2000	L. Newman/G. Velaski	1/1, v thru viii, 1 thru 80, and back cover
Rev. C	07/12/2000	K. Schweiss/G. Velaski	front cover, 9, 13, 15, 17, 18, 40, 41, 45, 47, 49, 56, 57, 59, 60, 62-65, 67-69, 74, 76, and back cover.

Notice.

Product Manual 83329484 is Volume 1 of a two volume document with the SCSI Interface information in the Volume 2 SCSI Interface Product Manual, part number 75789509.

If you need the SCSI Interface information, order the Volume 2 Interface Manual, part number 75789509.

Contents

1.0 Scope . . . 1

2.0 Applicable standards and reference documentation. . . . 3

2.1 Standards . . . 3
2.1.1 Electromagnetic compatibility . . . 3
2.1.2 Electromagnetic susceptibility . . . 3
2.2 Electromagnetic compliance . . . 3
2.3 Reference documents . . . 4

3.0 General description. . . . 5

3.1 Standard features . . . 7
3.2 Media characteristics . . . 7
3.3 Performance . . . 7
3.4 Reliability . . . 7
3.5 Unformatted and formatted capacities . . . 8
3.6 Programmable drive capacity . . . 8
3.7 Factory installed accessories . . . 8
3.8 Options (factory installed) . . . 8
3.9 Accessories (user installed) . . . 8

4.0 Performance characteristics . . . 9

4.1 Internal drive characteristics (transparent to user) . . . 9
4.2 SCSI performance characteristics (visible to user) . . . 9
4.2.1 Access time . . . 9
4.2.2 Format command execution time (minutes) . . . 9
4.2.3 Generalized performance characteristics . . . 9
4.3 Start/stop time . . . 10
4.4 Prefetch/multi-segmented cache control . . . 10
4.5 Cache operation . . . 10
4.5.1 Caching write data . . . 11
4.5.2 Prefetch operation . . . 12

5.0 Reliability specifications . . . 13

5.1 Error rates . . . 13
5.1.1 Environmental interference . . . 13
5.1.2 Read errors . . . 13
5.1.3 Write errors . . . 13
5.1.4 Seek errors . . . 13
5.2 Reliability and service . . . 14
5.2.1 Mean time between failure . . . 14
5.2.2 Field failure rate vs time . . . 14
5.2.3 Preventive maintenance . . . 15
5.2.4 Service life . . . 15
5.2.5 Service philosophy . . . 15
5.2.6 Service tools . . . 15
5.2.7 Hot plugging Cheetah X15 disc drives . . . 15
5.2.8 S.M.A.R.T. . . . 16
5.2.9 Thermal Monitor . . . 17
5.2.10 Drive Self Test (DST) . . . 17
5.2.11 Product warranty . . . 19

6.0 Physical/electrical specifications . . . 21

6.1 AC power requirements . . . 21
6.2 DC power requirements . . . 21
6.2.1 Conducted noise immunity . . . 22
6.2.2 Power sequencing . . . 22
6.2.3 12 V - Current profile . . . 22
6.3 Power dissipation . . . 25

6.4 Environmental limits 27
6.4.1 Temperature 27
6.4.2 Relative humidity 28
6.4.3 Effective altitude (sea level) 28
6.4.4 Shock and vibration 29
6.4.5 Air cleanliness 31
6.4.6 Acoustics 31
6.4.7 Electromagnetic susceptibility 31
6.5 Mechanical specifications 32

7.0 Defect and error management 35
7.1 Drive internal defects 35
7.2 Drive error recovery procedures 35
7.3 SCSI systems errors 36

8.0 Installation 37
8.1 Drive ID/option select header 37
8.1.1 Notes for Figures 15, 16, and 17 40
8.1.2 Function description 41
8.2 Drive orientation 42
8.3 Cooling 42
8.3.1 Air flow 42
8.4 Drive mounting 43
8.5 Grounding 43

9.0 Interface requirements 45
9.1 General description 45
9.2 SCSI interface messages supported 45
9.3 SCSI interface commands supported 46
9.3.1 Inquiry Vital Product data 49
9.3.2 Mode Sense data 50
9.4 SCSI bus conditions and miscellaneous features supported 53
9.5 Synchronous data transfer 54
9.5.1 Synchronous data transfer periods supported 54
9.5.2 REQ/ACK offset 54
9.6 Physical interface 54
9.6.1 DC cable and connector 54
9.6.2 SCSI interface physical description 56
9.6.3 SCSI interface cable requirements 56
9.6.4 Mating connectors 57
9.7 Electrical description 66
9.7.1 Multimode—SE and LVD alternatives 66
9.8 Terminator requirements 68
9.9 Terminator power 68
9.10 Disc drive SCSI timing 69
9.11 Drive activity LED 70

10.0 Seagate Technology support services 71

List of Figures

Figure 1. Cheetah X15 family drive (ST318451LW shown) 1
Figure 2. Cheetah X15 family drive (exploded view) 6
Figure 3. Typical ST318451 drive +12 V current profile 23
Figure 4. Typical ST318451 drive +5 V current profile 23
Figure 5. Typical ST39251 drive +12 V current profile 24
Figure 6. Typical ST39251 drive +5 V current profile 24
Figure 7. ST318451 DC current and power vs. input/output operations per second (SE) 25
Figure 8. ST318451 DC current and power vs. input/output operations per second (LVD) 25
Figure 9. ST39251 DC current and power vs. input/output operations per second (SE) 26
Figure 10. ST39251 DC current and power vs. input/output operations per second (LVD) 26
Figure 11. Locations of PCBA components listed in Table 4 28
Figure 12. Recommended mounting 30
Figure 13. LW mounting configuration dimensions 32
Figure 14. LC mounting configuration dimensions 33
Figure 15. J6 jumper header 38
Figure 16. J5 jumper header (on LW models only) 39
Figure 17. J2 option select header 40
Figure 18. Air flow (suggested) 42
Figure 19. LW model drive physical interface (68-pin J1 SCSI I/O connector) 55
Figure 20. LC model drive physical interface (80-pin J1 SCSI I/O connector) 55
Figure 21. SCSI daisy chain interface cabling for LW drives. 59
Figure 22. Nonshielded 68 pin SCSI device connector used on LW drives 60
Figure 23. Nonshielded 80 pin SCSI “SCA-2” connector, used on LC drives 61
Figure 24. LVD output signals 67
Figure 25. Typical SE-LVD alternative transmitter receiver circuits 67

1.0 Scope

This manual describes Seagate Technology®, LLC, Cheetah X15™ disc drives.

Cheetah X15 drives support the small computer system interface (SCSI) as described in the ANSI SCSI SPI-3 interface specifications to the extent described in this manual. The *SCSI Interface Product Manual* (part number 75789509) describes general SCSI interface characteristics of this and other families of Seagate drives.

From this point on in this product manual the reference to Cheetah X15 models is referred to as “the drive” unless references to individual models are necessary.

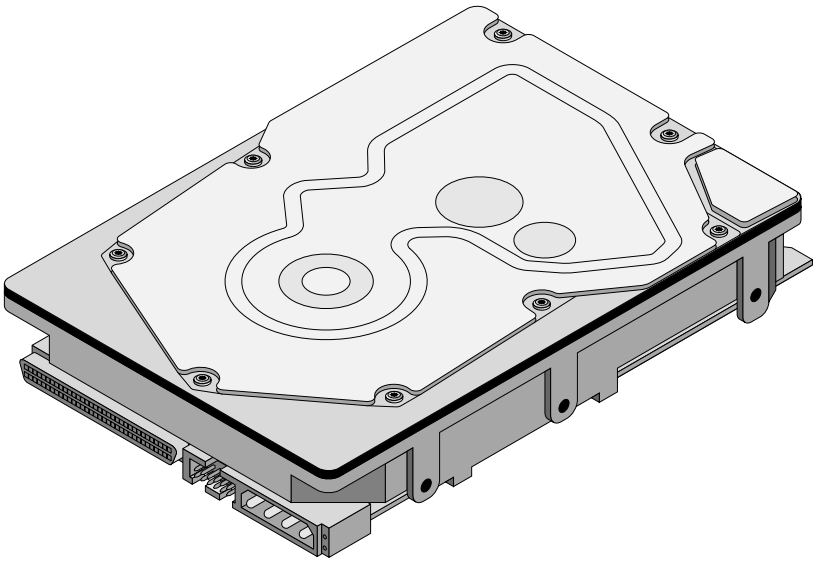

Figure 1. Cheetah X15 family drive (ST318451LW shown)

2.0 Applicable standards and reference documentation

The drive has been developed as a system peripheral to the highest standards of design and construction. The drive depends upon its host equipment to provide adequate power and environment in order to achieve optimum performance and compliance with applicable industry and governmental regulations. Special attention must be given in the areas of safety, power distribution, shielding, audible noise control, and temperature regulation. In particular, the drive must be securely mounted in order to guarantee the specified performance characteristics. Mounting by bottom holes must meet the requirements of Section 8.4.

2.1 Standards

The Cheetah X15 family complies with Seagate standards as noted in the appropriate sections of this Manual and the Seagate *SCSI Interface Product Manual*, part number 75789509 (Vol. 2).

The Cheetah X15 disc drive is a UL recognized component per UL1950, CSA certified to CSA C22.2 No. 950-M89, and VDE certified to VDE 0805 and EN60950.

2.1.1 Electromagnetic compatibility

The drive, as delivered, is designed for system integration and installation into a suitable enclosure prior to use. As such the drive is supplied as a subassembly and is not subject to Subpart B of Part 15 of the FCC Rules and Regulations nor the Radio Interference Regulations of the Canadian Department of Communications.

The design characteristics of the drive serve to minimize radiation when installed in an enclosure that provides reasonable shielding. As such, the drive is capable of meeting the Class B limits of the FCC Rules and Regulations of the Canadian Department of Communications when properly packaged. However, it is the user's responsibility to assure that the drive meets the appropriate EMI requirements in their system. Shielded I/O cables may be required if the enclosure does not provide adequate shielding. If the I/O cables are external to the enclosure, shielded cables should be used, with the shields grounded to the enclosure and to the host controller.

2.1.2 Electromagnetic susceptibility

As a component assembly, the drive is not required to meet any susceptibility performance requirements. It is the responsibility of those integrating the drive within their systems to perform those tests required and design their system to ensure that equipment operating in the same system as the drive or external to the system does not adversely affect the performance of the drive. See Section 5.1.1 and Table 3, DC power requirements.

2.2 Electromagnetic compliance

Seagate uses an independent laboratory to confirm compliance to the directives/standard(s) for CE Marking and C-Tick Marking. The drive was tested in a representative system for typical applications. The selected system represents the most popular characteristics for test platforms. The system configurations include:

- Typical current use microprocessor
- 3.5-inch floppy disc drive
- Keyboard
- Monitor/display
- Printer
- External modem
- Mouse

Although the test system with this Seagate model complies to the directives/standard(s), we cannot guarantee that all systems will comply. The computer manufacturer or system integrator shall confirm EMC compliance and provide CE Marking and C-Tick Marking for their product.

Electromagnetic compliance for the European Union

If this model has the CE Marking it complies with the European Union requirements of the Electromagnetic Compatibility Directive 89/336/EEC of 03 May 1989 as amended by Directive 92/31/EEC of 28 April 1992 and Directive 93/68/EEC of 22 July 1993.

Australian C-Tick

If this model has the C-Tick Marking it complies with the Australia/New Zealand Standard AS/NZS3548 1995 and meets the Electromagnetic Compatibility (EMC) Framework requirements of Australia's Spectrum Management Agency (SMA).

2.3 Reference documents

Cheetah X15 Installation Guide	Seagate P/N 83329485
Safety and Regulatory Agency Specifications	Seagate P/N 75789512
SCSI Interface Product Manual	Seagate P/N 75789509

Applicable ANSI small computer system interface (SCSI) document numbers:

T10/1143D	Enhanced SCSI Parallel Interface (EPI)
T10/1236D	Primary Commands-2 (SPC-2)
T10/996D	SCSI Block Commands (SBC)
T10/1157D	SCSI Architectural Model-2 (SAM-2)
T10/1302D	SPI-3 (SCSI Parallel Interface version 3)
SFF-8046	Specification for 80-pin connector
Package Test Specification	Seagate P/N 30190-001 (under 100 lb.)
Package Test Specification	Seagate P/N 30191-001 (over 100 lb.)
Specification, Acoustic Test Requirements, and Procedures	Seagate P/N 30553-001

In case of conflict between this document and any referenced document, this document takes precedence.

3.0 General description

Cheetah X15 drives combine giant magnetoresistive (GMR) heads, partial response/maximum likelihood (PRML) read channel electronics, embedded servo technology, and a wide Ultra160 SCSI interface to provide high performance, high capacity data storage for a variety of systems including engineering workstations, network servers, mainframes, and supercomputers.

Ultra160 SCSI uses negotiated transfer rates. These transfer rates will occur only if your host adapter supports these data transfer rates and is compatible with the required hardware requirements of the I/O circuit type. This drive also operates at SCSI-1 and SCSI-2 data transfer rates for backward compatibility with non-Ultra/Ultra2/Ultra160 SCSI host adapters.

Table 1 lists the features that differentiate the Cheetah X15 models.

Table 1: Drive model number vs. differentiating features

Model number	Number of active heads	Cache [2] (kbytes)	I/O circuit type [1]	Number of I/O connector pins	Number of I/O data bus bits
ST318451LW	10	4,096	Single-ended (SE) and low voltage differential (LVD)	68	16
ST318451LC ST39251LC	10	4,096	Single-ended (SE) and low voltage differential (LVD)	80	16

[1] See Section 9.6 for details and definitions.
[2] See Section 4.5 for cache details.

The drive records and recovers data on approximately 2.5-inch (65 mm) non-removeable discs.

The drive supports the Small Computer System Interface (SCSI) as described in the ANSI SCSI interface specifications to the extent described in this manual (volume 1), which defines the product performance characteristics of the Cheetah X15 family of drives, and the *SCSI Interface Product Manual* (volume 2), part number 75789509, which describes the general interface characteristics of this and other families of Seagate SCSI drives.

The drive's interface supports multiple initiators, disconnect/reconnect, self-configuring host software, and automatic features that relieve the host from the necessity of knowing the physical characteristics of the targets (logical block addressing is used).

The head and disc assembly (HDA) is sealed at the factory. Air circulates within the HDA through a non-replaceable filter to maintain a contamination-free HDA environment.

Refer to Figure 2 for an exploded view of the drive. This exploded view is for information only—never disassemble the HDA and do not attempt to service items in the sealed enclosure (heads, media, actuator, etc.) as this requires special facilities. The drive contains no replaceable parts. Opening the HDA voids your warranty.

Cheetah X15 drives use a dedicated landing zone at the innermost radius of the media to eliminate the possibility of destroying or degrading data by landing in the data zone. The drive automatically goes to the landing zone when power is removed.

An automatic shipping lock prevents potential damage to the heads and discs that results from movement during shipping and handling. The shipping lock automatically disengages when power is applied to the drive and the head load process begins.

Cheetah X15 drives decode track 0 location data from the servo data embedded on each surface to eliminate mechanical transducer adjustments and related reliability concerns.

A high-performance actuator assembly with a low-inertia, balanced, patented, straight-arm design provides excellent performance with minimal power dissipation.

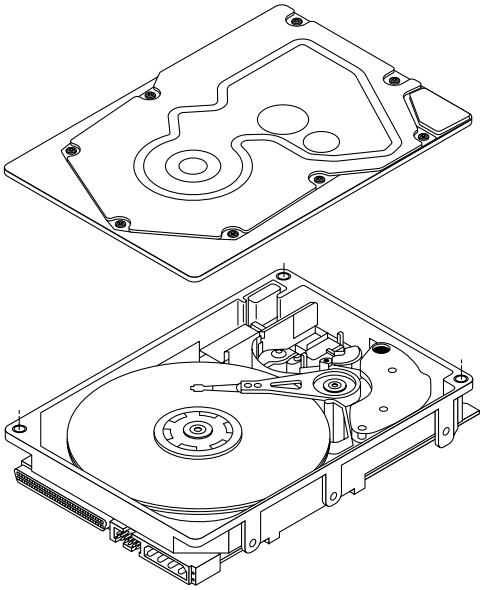

Figure 2. Cheetah X15 family drive (exploded view)

3.1 Standard features

The Cheetah X15 family has the following standard features:

- Integrated Ultra160 SCSI controller
- Multimode SCSI drivers and receivers—single-ended (SE) and low voltage differential (LVD)
- 16 bit I/O data bus
- Asynchronous and synchronous data transfer protocol (supports Ultra160 transfer rate)
- Firmware downloadable via SCSI interface
- Selectable even byte sector sizes from 512 to 2,064 bytes/sector
- Programmable sector reallocation scheme
- Flawed sector reallocation at format time
- Programmable auto write and read reallocation
- Reallocation of defects on command (post format)
- ECC maximum burst correction length of 240 bits with a guaranteed burst correction length of 233 bits.
- Sealed head and disc assembly
- No preventative maintenance or adjustment required
- Dedicated head landing zone
- Embedded servo design
- Self diagnostics performed when power is applied to the drive
- Zoned bit recording (ZBR)
- Vertical, horizontal, or top down mounting
- Dynamic spindle brake
- 4,096 kbytes data buffer
- Hot plug compatibility (Section 9.6.4.2 lists proper host connector needed) for LC model drives
- Drive Self Test (DST)
- Supports SCSI bus fairness

3.2 Media characteristics

The media used on the drive has an aluminum substrate coated with a thin film magnetic material, overcoated with a proprietary protective layer for improved durability and environmental protection.

3.3 Performance

- Supports industry standard Ultra160 SCSI interface
- Programmable multi-segmentable cache buffer (see Section 4.5)
- 15k RPM spindle. Average latency = 2.0 ms
- Command queuing of up to 64 commands
- Background processing of queue
- Supports start and stop commands (spindle stops spinning)

3.4 Reliability

- 1,200,000 hour MTBF
- LSI circuitry
- Balanced low mass rotary voice coil actuator
- Incorporates industry-standard Self-Monitoring, Analysis and Reporting Technology (S.M.A.R.T.)
- 5-year warranty

3.5 Unformatted and formatted capacities

Formatted capacity depends on the number of spare reallocation sectors reserved and the number of bytes per sector. The following table shows the standard OEM model capacities:

	Formatted data block size 512 bytes/sector [1]	Unformatted
ST318451	0222EE56h (18.35 GB) [2]	23.86 GB
ST39251	0111772Bh (9.176 GB) [2]	11.94 GB

Notes.

[1] Sector size selectable at format time. Users having the necessary equipment may modify the data block size before issuing a format command and obtain different formatted capacities than those listed. See Mode Select Command and Format Command in the *SCSI Interface Product Manual*.

[2] User available capacity depends on spare reallocation scheme selected, the number of data tracks per sparing zone, and the number of alternate sectors (LBAs) per sparing zone.

3.6 Programmable drive capacity

Using the Mode Select command, the drive can change its capacity to something less than maximum. See the Mode Select Parameter List table in the *SCSI Interface Product Manual*. Refer to the Parameter list block descriptor number of blocks field. A value of zero in the number of blocks field indicates that the drive shall not change the capacity it is currently formatted to have. A number in the number of blocks field that is less than the maximum number of LBAs changes the total drive capacity to the value in the block descriptor number of blocks field. A value greater than the maximum number of LBAs is rounded down to the maximum capacity.

3.7 Factory installed accessories

OEM Standard drives are shipped with the *Cheetah X15 Installation Guide*, part number 83329485, and the *Safety and Regulatory Agency Specifications*, part number 75789512 (unless otherwise specified). The factory also ships with the drive a small bag of jumper plugs used for the J2, J5, and J6 option select jumper headers.

3.8 Options (factory installed)

All customer requested options are incorporated during production or packaged at the manufacturing facility before shipping. Some of the options available are (not an exhaustive list of possible options):

- Other capacities can be ordered depending on sparing scheme and sector size requested.
- Single unit shipping pack. The drive is normally shipped in bulk packaging to provide maximum protection against transit damage. Units shipped individually require additional protection as provided by the single unit shipping pack. Users planning single unit distribution should specify this option.
- The *Cheetah X15 Installation Guide*, part number 83329485, is usually included with each standard OEM drive shipped, but extra copies may be ordered.
- The *Safety and Regulatory Agency Specifications*, part number 75789512, is usually included with each standard OEM drive shipped, but extra copies may be ordered.

3.9 Accessories (user installed)

The following accessories are available. All accessories may be installed in the field.

- Single unit shipping pack.

4.0 Performance characteristics

4.1 Internal drive characteristics (transparent to user)

	ST318451	ST39251	
Drive capacity	18.35	9.2	GByte (formatted, rounded off values)
Read/write heads	10	6	
Bytes/track	176,843	176,843	Bytes (average, rounded off values)
Bytes/surface	1,835	1,835	Mbytes (unformatted, rounded off values)
Tracks/surface (total)	10,377	10,377	Tracks (user accessible)
Tracks/inch	21,400	21,400	TPI
Peak bits/inch	343	343	KBPI
Internal data rate	385-508	385-508	Mbits/sec (variable with zone)
Disc rotational speed	15k	15k	r/min
Average rotational latency	2.0	2.0	msec

4.2 SCSI performance characteristics (visible to user)

The values given in Section 4.2.1 apply to all models of the Cheetah X15 family unless otherwise specified. Refer to Section 9.10 and to the *SCSI Interface Product Manual* for additional timing details.

4.2.1 Access time [5]

				Including controller overhead (without disconnect) [1] [3]		Not including controller overhead (without disconnect) [1] [3]	
				Drive level		Drive level	
				Read	Write	Read	Write
				msec		msec	
Average	–	Typical	[2]	4.1	4.7	3.9	4.5
Single Track	–	Typical	[2]	0.8	1.0	0.5	0.7
Full Stroke	–	Typical	[2]	7.7	8.2	7.5	8.0

4.2.2 Format command execution time (minutes) [1]

	ST318451	ST39251
Maximum (with verify)	60	30
Maximum (no verify)	30	15

4.2.3 Generalized performance characteristics

Minimum sector interleave 1 to 1

Data buffer transfer rate to/from disc media (one 512-byte sector):

Min.	[3]*	37.4	MBytes/sec
Max.	[3]	48.9	MBytes/sec

SCSI interface data transfer rate (asynchronous):

Maximum instantaneous one byte wide	5.0 Mbytes/sec [4]
Maximum instantaneous two bytes wide	10.0 Mbytes/sec [4]

Synchronous formatted transfer rate	Ultra2 SCSI	Ultra160 SCSI
In low voltage differential (LVD) interface mode	5.0 to 80 Mbytes/sec	5.0 to 160 Mbytes/sec

Sector Sizes:

Default	512 byte user data blocks
Variable	512 to 2,064 bytes per sector in even number of bytes per sector. If n (number of bytes per sector) is odd, then n-1 will be used.

Read/write consecutive sectors on a track	Yes
Flaw reallocation performance impact (for flaws reallocated at format time using the spare sectors per sparing zone reallocation scheme.)	Negligible
Average rotational latency	2.00 msec

Notes for Section 4.2.

[1] Execution time measured from receipt of the last byte of the Command Descriptor Block (CDB) to the request for a Status Byte Transfer to the Initiator (excluding connect/disconnect).
[2] Typical access times are measured under nominal conditions of temperature, voltage, and horizontal orientation as measured on a representative sample of drives.
[3] Assumes no errors and no sector has been relocated.
[4] Assumes system ability to support the rates listed and no cable loss.
[5] Access time = controller overhead + average seek time.
Access to data = controller overhead + average seek time + latency time.

4.3 Start/stop time

After DC power at nominal voltage has been applied, the drive becomes ready within 20 seconds if the Motor Start Option is disabled (i.e. the motor starts as soon as the power has been applied). If a recoverable error condition is detected during the start sequence, the drive executes a recovery procedure which may cause the time to become ready to exceed 20 seconds. During spin up to ready time the drive responds to some commands over the SCSI interface in less than 3 seconds after application of power. Stop time is 30 seconds from removal of DC power.

If the Motor Start Option is enabled, the internal controller accepts the commands listed in the SCSI Interface Product Manual less than 3 seconds after DC power has been applied. After the Motor Start Command has been received the drive becomes ready for normal operations within 20 seconds typically (excluding an error recovery procedure). The Motor Start Command can also be used to command the drive to stop the spindle (see the *SCSI Interface Product Manual*).

There is no power control switch on the drive.

4.4 Prefetch/multi-segmented cache control

The drive provides prefetch (read look-ahead) and multi-segmented cache control algorithms that in many cases can enhance system performance. “Cache” as used herein refers to the drive buffer storage space when it is used in cache operations. To select prefetch and cache features the host sends the Mode Select command with the proper values in the applicable bytes in Mode Page 08h (see the *SCSI Interface Product Manual*). Prefetch and cache operation are independent features from the standpoint that each is enabled and disabled independently via the Mode Select command. However, in actual operation the prefetch feature overlaps cache operation somewhat as is noted in Section 4.5.1 and 4.5.2.

All default cache and prefetch Mode parameter values (Mode Page 08h) for standard OEM versions of this drive family are given in Tables 9.

4.5 Cache operation

In general, 3,600 kbytes of the physical buffer space in the drive can be used as storage space for cache operations. The buffer can be divided into logical segments (Mode Select Page 08h, byte 13) from which data is read and to which data is written. The drive supports a maximum of 64 cache segments. The drive maintains a table of logical block disk medium addresses of the data stored in each segment of the buffer. If cache operation is enabled (RCD bit = 0 in Mode Page 08h, byte 2, bit 0. See *SCSI Interface Product Manual*), data

requested by the host with a Read command is retrieved from the buffer (if it is there), before any disc access is initiated. If cache operation is not enabled, the buffer (still segmented with required number of segments) is still used, but only as circular buffer segments during disc medium read operations (disregarding Prefetch operation for the moment). That is, the drive does not check in the buffer segments for the requested read data, but goes directly to the medium to retrieve it. The retrieved data merely passes through some buffer segment on the way to the host. On a cache miss, all data transfers to the host are in accordance with buffer-full ratio rules. On a cache hit the drive ignores the buffer-full ratio rules. See explanations associated with Mode page 02h (disconnect/reconnect control) in the *SCSI Interface Product Manual*.

The following is a simplified description of a read operation with cache operation enabled:

Case A - A Read command is received and the first logical block (LB) is already in cache:

1. Drive transfers to the initiator the first LB requested plus all subsequent contiguous LBs that are already in the cache. This data may be in multiple segments.
2. When the requested LB is reached that is not in any cache segment, the drive fetches it and any remaining requested LBs from the disc and puts them in a segment of the cache. The drive transfers the remaining requested LBs from the cache to the host in accordance with the disconnect/reconnect specification mentioned above.
3. If the prefetch feature is enabled, refer to Section 4.5.2 for operation from this point.

Case B - A Read command requests data, the first LB of which is not in any segment of the cache:

1. The drive fetches the requested LBs from the disc and transfers them into a segment, and from there to the host in accordance with the disconnect/reconnect specification referred to in case A.
2. If the prefetch feature is enabled, refer to Section 4.5.2 for operation from this point.

Each buffer segment is actually a self-contained circular storage (wrap-around occurs), the length of which is an integer number of disc medium sectors. The wrap-around capability of the individual segments greatly enhances the buffer's overall performance as a cache storage, allowing a wide range of user selectable configurations, which includes their use in the prefetch operation (if enabled), even when cache operation is disabled (see Section 4.5.2). The number of segments is set dynamically by the drive and cannot be set by the host. The size in Kbytes of each segment is not reported by the Mode Sense command page 08h, bytes 14 and 15. The value 0XFFFF is always reported. If a size specification is sent by the host in a Mode Select command (bytes 14 and 15) no new segment size is set up by the drive, and if the STRICT bit in Mode page 00h (byte 2, bit 1) is set to one, the drive responds as it does for any attempt to change unchangeable parameters (see *SCSI Interface Product Manual*).

4.5.1 Caching write data

Write caching is a write operation by the drive that makes use of a drive buffer storage area where the data to be written to the medium is stored in one or more segments while the drive performs the write command.

If read caching is enabled (RCD=0), then data written to the medium is retained in the cache to be made available for future read cache hits. The same buffer space and segmentation is used as set up for read functions. The buffer segmentation scheme is set up or changed independently, having nothing to do with the state of RCD. When a write command is issued, if RCD=0, the cache is first checked to see if any logical blocks that are to be written are already stored in the cache from a previous read or write command. If there are, the respective cache segments are cleared. The new data is cached for subsequent Read commands.

If the number of write data logical blocks exceeds the size of the segment being written into, when the end of the segment is reached, the data is written into the beginning of the same cache segment, overwriting the data that was written there at the beginning of the operation. However, the drive does not overwrite data that has not yet been written to the medium.

If write caching is enabled (WCE=1), then the drive may return GOOD status on a write command after the data has been transferred into the cache, but before the data has been written to the medium. If an error occurs while writing the data to the medium, and GOOD status has already been returned, a deferred error will be generated.

The Synchronize Cache command may be used to force the drive to write all cached write data to the medium. Upon completion of a Synchronize Cache command, all data received from previous write commands will have been written to the medium.

Tables 9 show Mode default settings for the drives.

4.5.2 Prefetch operation

If the Prefetch feature is enabled, data in contiguous logical blocks on the disc immediately beyond that which was requested by a Read command can be retrieved and stored in the buffer for immediate transfer from the buffer to the host on subsequent Read commands that request those logical blocks (this is true even if cache operation is disabled). Though the prefetch operation uses the buffer as a cache, finding the requested data in the buffer is a prefetch hit, not a cache operation hit. Prefetch is enabled using Mode Select page 08h, byte 12, bit 5 (Disable Read Ahead - DRA bit). DRA bit = 0 enables prefetch. Since data that is prefetched replaces data already in some buffer segment(s), the host can limit the amount of prefetch data to optimize system performance. The max prefetch field (bytes 8 and 9) limits the amount of prefetch. The drive does not use the Prefetch Ceiling field (bytes 10 and 11).

During a prefetch operation, the drive crosses a cylinder boundary to fetch more data only if the Discontinuity (DISC) bit is set to one in bit 4 of byte 2 of Mode parameters page 08h.

Whenever prefetch (read look-ahead) is enabled (enabled by DRA = 0), it operates under the control of ARLA (Adaptive Read Look-Ahead). If the host uses software interleave, ARLA enables prefetch of contiguous blocks from the disc when it senses that a prefetch hit will likely occur, even if two consecutive read operations were not for physically contiguous blocks of data (e.g., “software interleave”). ARLA disables prefetch when it decides that a prefetch hit will not likely occur. If the host is not using software interleave, and if two sequential read operations are not for contiguous blocks of data, ARLA disables prefetch, but as long as sequential read operations request contiguous blocks of data, ARLA keeps prefetch enabled.

5.0 Reliability specifications

The following reliability specifications assume correct host/drive operational interface, including all interface timings, power supply voltages, environmental requirements and drive mounting constraints (see Section 8.4).

Seek Errors	Less than 10 in 10^8 seeks
Read Error Rates [1]	
Recovered Data	Less than 10 errors in 10^{12} bits transferred (OEM default settings)
Unrecovered Data	Less than 1 sector in 10^{15} bits transferred (OEM default settings)
Miscorrected Data	Less than 1 sector in 10^{21} bits transferred
MTBF	1,200,000 hours
Service Life	5 years
Preventive Maintenance	None required

Note.

[1] Error rate specified with automatic retries and data correction with ECC enabled and all flaws reallocated.

5.1 Error rates

The error rates stated in this specification assume the following:

- The drive is operated per this specification using DC power as defined in this manual (see Section 6.2).
- The drive has been formatted with the SCSI FORMAT command.
- Errors caused by media defects or host system failures are excluded from error rate computations. Refer to Section 3.2, “Media Characteristics.”
- Assume random data.

5.1.1 Environmental interference

When evaluating systems operation under conditions of Electromagnetic Interference (EMI), the performance of the drive within the system shall be considered acceptable if the drive does not generate an unrecoverable condition.

An unrecoverable error, or unrecoverable condition, is defined as one that:

- Is not detected and corrected by the drive itself;
- Is not capable of being detected from the error or fault status provided through the drive or SCSI interface; or
- Is not capable of being recovered by normal drive or system recovery procedures without operator intervention.

5.1.2 Read errors

Before determination or measurement of read error rates:

- The data that is to be used for measurement of read error rates must be verified as being written correctly on the media.
- All media defect induced errors must be excluded from error rate calculations.

5.1.3 Write errors

Write errors can occur as a result of media defects, environmental interference, or equipment malfunction. Therefore, write errors are not predictable as a function of the number of bits passed.

If an unrecoverable write error occurs because of an equipment malfunction in the drive, the error is classified as a failure affecting MTBF. Unrecoverable write errors are those which cannot be corrected within two attempts at writing the record with a read verify after each attempt (excluding media defects).

5.1.4 Seek errors

A seek error is defined as a failure of the drive to position the heads to the addressed track. There shall be no more than ten recoverable seek errors in 10^8 physical seek operations. After detecting an initial seek error, the drive automatically performs an error recovery process. If the error recovery process fails, a seek positioning

error (15h) is reported with a Medium error (3h) or Hardware error (4h) reported in the Sense Key. This is an unrecoverable seek error. Unrecoverable seek errors are classified as failures for MTBF calculations. Refer to the *SCSI Interface Product Manual,* part number 75789509, for Request Sense information.

5.2 Reliability and service

You can enhance the reliability of Cheetah X15 disc drives by ensuring that the drive receives adequate cooling. Section 6.0 provides temperature measurements and other information that may be used to enhance the service life of the drive. Section 8.3.1 provides recommended air-flow information.

5.2.1 Mean time between failure

The production disc drive shall achieve an MTBF of 1,200,000 hours when operated in an environment that ensures the case temperatures specified in Section 6.4.1, Table 4 are not exceeded. Short-term excursions up to the specification limits of the operating environment will not affect MTBF performance. Continual or sustained operation at case temperatures above the values shown in Table 4 may degrade product reliability.

The MTBF target is specified as device power-on hours (POH) for all drives in service per failure.

$$\text{Estimated power-on operating hours in the period} = \frac{\text{MTBF per measurement period}}{\text{Number of drive failures in the period}}$$

Estimated power-on operation hours means power-up hours per disc drive times the total number of disc drives in service. Each disc drive shall have accumulated at least nine months of operation. Data shall be calculated on a rolling average base for a minimum period of six months.

MTBF is based on the following assumptions:

- 8,760 power-on hours per year.
- 250 average on/off cycles per year.
- Operations at nominal voltages.
- Systems will provide adequate cooling to ensure the case temperatures specified in Section 6.4.1 are not exceeded.

Drive failure means any stoppage or substandard performance caused by drive malfunction.

A S.M.A.R.T. predictive failure indicates that the drive is deteriorating to an imminent failure and is considered an MTBF hit.

5.2.2 Field failure rate vs time

The expected field failure rate is listed below. Drive utilization will vary. An estimated range of utilization is:

- 720 power-on hours (POH) per month.
- 250 on/off cycles per year.
- Read/seek/write operation 20% of power-on hours.
- Systems will provide adequate cooling to ensure the case temperatures specified in Section 6.4.1 are not exceeded.

Month 1	2,364 PPM
Month 2	1,422 PPM
Month 3	1,403 PPM
Month 4	1,391 PPM
Month 5	1,317 PPM
Month 6	1,255 PPM
Month 7	1,162 PPM

Failure rate is calculated as follows:

- No system-induced failures are counted
- Based on 1,200,000 MTBF and 720 power-on hours per month
- Month 1’s rate includes a 300 PPM installation failure

5.2.3 Preventive maintenance

No routine scheduled preventive maintenance shall be required.

5.2.4 Service life

The drive shall have a useful service life of five years. Depot repair or replacement of major parts is permitted during the lifetime (see Section 5.2.5).

5.2.5 Service philosophy

Special equipment is required to repair the drive HDA. In order to achieve the above service life, repairs must be performed only at a properly equipped and staffed service and repair facility. Troubleshooting and repair of PCBs in the field is not recommended, because of the extensive diagnostic equipment required for effective servicing. Also, there are no spare parts available for this drive. Drive warranty is voided if the HDA is opened.

5.2.6 Service tools

No special tools are required for site installation or recommended for site maintenance. Refer to Section 5.2.5. The depot repair philosophy of the drive precludes the necessity for special tools. Field repair of the drive is not practical since there are no user purchasable parts in the drive.

5.2.7 Hot plugging Cheetah X15 disc drives

The ANSI SPI-3 (T10/1302D) document defines the physical requirements for removal and insertion of SCSI devices on the SCSI bus. Four cases are addressed. The cases are differentiated by the state of the SCSI bus when the removal or insertion occurs.

Case 1 - All bus devices powered off during removal or insertion

Case 2 - RST signal asserted continuously during removal or insertion

Case 3 - Current I/O processes not allowed during insertion or removal

Case 4 - Current I/O process allowed during insertion or removal, except on the device being changed

Seagate Cheetah X15 disc drives support all four hot plugging cases. Provision shall be made by the system such that a device being inserted makes power and ground connections prior to the connection of any device signal contact to the bus. A device being removed shall maintain power and ground connections after the disconnection of any device signal contact from the bus (see SFF-8046, SCA-2 specification).

It is the responsibility of the systems integrator to assure that no hazards from temperature, energy, voltage, or ESD potential are presented during the hot connect/disconnect operation.

All I/O processes for the SCSI device being inserted or removed shall be quiescent. All SCSI devices on the bus shall have receivers that conform to the SPI-3 standard.

If the device being hot plugged uses single-ended (SE) drivers and the bus is currently operating in low voltage differential (LVD) mode, then all I/O processes for all devices on the bus must be completed, and the bus quiesced, before attempting to hot plug. Following the insertion of the newly installed device, the SCSI host adapter must issue a Bus Reset, followed by a synchronous transfer negotiation. Failure to perform the SCSI Bus Reset could result in erroneous bus operations.

The SCSI bus termination and termination power source shall be external to the device being inserted or removed.

End users should not mix devices with high voltage differential (HVD) drivers and receivers and devices with SE, LVD, or multimode drivers and receivers on the same SCSI bus since the common mode voltages in the HVD environment may not be controlled to safe levels for SE and LVD devices (see ANSI SPI-3).

The disc drive spindle must come to a complete stop prior to completely removing the drive from the cabinet chassis. Use of the Stop Spindle command or partial withdrawal of the drive, enough to be disconnected from the power source, prior to removal are methods for insuring that this requirement is met. During drive insertion, care should be taken to avoid exceeding the limits stated in Section 6.4.4, "Shock and vibration" in this manual.

5.2.8 S.M.A.R.T.

S.M.A.R.T. is an acronym for Self-Monitoring Analysis and Reporting Technology. This technology is intended to recognize conditions that indicate a drive failure and is designed to provide sufficient warning of a failure to allow data back-up before an actual failure occurs.

Note. The firmware will monitor specific attributes for degradation over time but cannot predict instantaneous drive failures.

Each attribute has been selected to monitor a specific set of failure conditions in the operating performance of the drive, and the thresholds are optimized to minimize “false” and “failed” predictions.

Controlling S.M.A.R.T.

The operating mode of S.M.A.R.T. is controlled by the DEXCPT bit and the PERF bit of the “Informational Exceptions Control Mode Page” (1Ch). The DEXCPT bit is used to enable or disable the S.M.A.R.T. process. Setting the DEXCPT bit will disable all S.M.A.R.T. functions. When enabled, S.M.A.R.T. will collect on-line data as the drive performs normal read/write operations. When the PERF bit is set, the drive is considered to be in “On-line Mode Only” and will not perform off-line functions.

The process of measuring off-line attributes and saving data can be forced by the Rezero Unit command. Forcing S.M.A.R.T. will reset the timer so that the next scheduled interrupt will be two hours.

The drive can be interrogated by the host to determine the time remaining before the next scheduled measurement and data logging process will occur. This is accomplished by a log sense command to log page 0x3E. The purpose is to allow the customer to control when S.M.A.R.T. interruptions occur. As described above, forcing S.M.A.R.T by the Rezero Unit command will reset the timer.

Performance impact

S.M.A.R.T. attribute data will be saved to the disc for the purpose of recreating the events that caused a predictive failure. The drive will measure and save parameters once every two hours subject to an idle period on the SCSI bus. The process of measuring off-line attribute data and saving data to the disc is uninterruptable and the maximum delay is summarized below:

Maximum processing delay

	On-line only delay DEXCPT = 0, PERF = 1	**Fully enabled delay DEXCPT = 0, PERF = 0**
S.M.A.R.T. delay times	50 milliseconds	300 milliseconds

Reporting control

Reporting is controlled in the Informational Exceptions Control Page (1Ch). Subject to the reporting method, the firmware will issue a 01-5D00 sense code to the host. The error code is preserved through bus resets and power cycles.

Determining rate

S.M.A.R.T. monitors the rate at which errors occur and signals a predictive failure if the rate of degraded error rate increases to an unacceptable level. To determine rate, error events are logged and compared to the number of total operations for a given attribute. The interval defines the number of operations over which to measure the rate. The counter that keeps track of the current number of operations is referred to as the Interval Counter.

S.M.A.R.T. measures error rate, hence for each attribute the occurrence of an error is recorded. A counter keeps track of the number of errors for the current interval. This counter is referred to as the Failure Counter.

Error rate is simply the number of errors per operation. The algorithm that S.M.A.R.T. uses to record rates of error is to set thresholds for the number of errors and the interval. If the number of errors exceeds the threshold before the interval expires, then the error rate is considered to be unacceptable. If the number of errors does not exceed the threshold before the interval expires, then the error rate is considered to be acceptable. In either case, the interval and failure counters are reset and the process starts over.

Predictive failures

S.M.A.R.T. signals predictive failures when the drive is performing unacceptably for a period of time. The firmware keeps a running count of the number of times the error rate for each attribute is unacceptable. To accomplish this, a counter is incremented whenever the error rate is unacceptable and decremented (not to exceed zero) whenever the error rate is acceptable. Should the counter continually be incremented such that it reaches the predictive threshold, a predictive failure is signaled. This counter is referred to as the Failure History Counter. There is a separate Failure History Counter for each attribute.

5.2.9 Thermal Monitor

Cheetah X15 drives implement a temperature warning system which:

1. Signals the host if the temperature exceeds a value which would threaten the drive.
2. Signals the host if the temperature exceeds a user-specified value.
3. Saves a S.M.A.R.T. data frame on the drive which exceed the threatening temperature value.

A temperature sensor monitors the drive temperature and issues a warning over the interface when the temperature exceeds a set threshold. The temperature is measured at power-up and then at ten-minute intervals after power-up.

The thermal monitor system generates a warning code of 01-0B01 when the temperature exceeds the specified limit in compliance with the SCSI standard. The drive temperature is reported in the FRU code field of mode sense data. You can use this information to determine if the warning is due to the temperature exceeding the drive threatening temperature or the user-specified temperature.

This feature is controlled by the Enable Warning (EWasc) bit, and the reporting mechanism is controlled by the Method of Reporting Informational Exceptions field (MRIE) on the Informational Exceptions Control (IEC) mode page (1Ch).

The current algorithm implements two temperature trip points. The first trip point is set at 65°C which is the maximum temperature limit according to the drive specification. The second trip point is user-selectable using the Log Select command. The reference temperature parameter in the temperature log page (see Table 2) can be used to set this trip point. The default value for this drive is 65°C, however, you can set it to any value in the range of 0 to 65°C. If you specify a temperature greater than 65°C in this field, the temperature is rounded down to 65°C. A sense code is sent to the host to indicate the rounding of the parameter field.

Table 2: Temperature Log page (0Dh)

Parameter Code	Description
0000h	Primary Temperature
0001h	Reference Temperature

When the first temperature trip point is exceeded, S.M.A.R.T. data is collected and a frame is saved to the disc.

5.2.10 Drive Self Test (DST)

Drive Self Test (DST) is a technology designed to recognize drive fault conditions that qualify the drive as a failed unit. DST validates the functionality of the drive at a system level.

There are two test coverage options implemented in DST:

1. Extended test
2. Short text

The most thorough option is the extended test that performs various tests on the drive and scans every logical block address (LBA) of the drive. The short test is time-restricted and limited in length—it does not scan the entire media surface, but does some fundamental tests and scans portions of the media.

If DST encounters an error during either of these tests, it reports a fault condition. If the drive fails the test, remove it from service and return it to Seagate for service.

5.2.10.1 DST Failure Definition

The drive will present a “diagnostic failed” condition through the self-tests results value of the diagnostic log page if a functional failure is encountered during DST. The channel and servo parameters are not modified to test the drive more stringently, and the number of retries are not reduced. All retries and recovery processes are enabled during the test. If data is recoverable, no failure condition will be reported regardless of the number of retries required to recover the data.

The following conditions are considered DST failure conditions:

- Seek error after retries are exhausted
- Track-follow error after retries are exhausted
- Read error after retries are exhausted
- Write error after retries are exhausted.

Recovered errors will not be reported as diagnostic failures.

5.2.10.2 Implementation

This section provides all of the information necessary to implement the DST function on this drive.

5.2.10.2.1 State of the drive prior to testing

The drive must be in a ready state before issuing the Send Diagnostic command. There are multiple reasons why a drive may not be ready, some of which are valid conditions, and not errors. For example, a drive may be in process of doing a format, or another DST. It is the responsibility of the host application to determine the “not ready” cause.

While not technically part of DST, a Not Ready condition also qualifies the drive to be returned to Seagate as a failed drive.

A Drive Not Ready condition is reported by the drive under the following conditions:

- Motor will not spin
- Motor will not lock to speed
- Servo will not lock on track
- Drive cannot read configuration tables from the disc

In these conditions, the drive responds to a Test Unit Ready command with an 02/04/00 or 02/04/03 code.

5.2.10.2.2 Invoking DST

To invoke DST, submit the Send Diagnostic command with the appropriate Function Code (001b for the short test or 010b for the extended test) in bytes 1, bits 5, 6, and 7. Refer to the Seagate SCSI Interface Manual, Volume 3, part number 75789509 for additional information about invoking DST.

5.2.10.2.3 Short and extended tests

DST has two testing options:

1. short
2. extended

These testing options are described in the following two subsections.

Each test consists of three segments: an electrical test segment, a servo test segment, and a read/verify scan segment.

Short test (Function Code: 001b)

The purpose of the short test is to provide a time-limited test that tests as much of the drive as possible within 120 seconds. The short test does not scan the entire media surface, but does some fundamental tests and scans portions of the media. A complete read/verify scan is not performed and only factual failures will report a fault condition. This option provides a quick confidence test of the drive.

Extended test (Function Code: 010b)

The objective of the extended test option is to empirically test critical drive components. For example, the seek tests and on-track operations test the positioning mechanism. The read operation tests the read head element

and the media surface. The write element is tested through read/write/read operations. The integrity of the media is checked through a read/verify scan of the media. Motor functionality is tested by default as a part of these tests.

The anticipated length of the Extended test is reported through the Control Mode page.

5.2.10.2.4 Log page entries

When the drive begins DST, it creates a new entry in the Self-test Results Log page. The new entry is created by inserting a new self-test parameter block at the beginning of the self-test results log parameter section of the log page. Existing data will be moved to make room for the new parameter block. The drive reports 20 parameter blocks in the log page. If there are more than 20 parameter blocks, the least recent parameter block will be deleted. The new parameter block will be initialized as follows:

1. The Function Code field is set to the same value as sent in the DST command
2. The Self-Test Results Value field is set to Fh
3. The drive will store the log page to non-volatile memory

After a self-test is complete or has been aborted, the drive updates the Self-Test Results Value field in its Self-Test Results Log page in non-volatile memory. The host may use Log Sense to read the results from up to the last 20 self-tests performed by the drive. The self-test results value is a 4-bit field that reports the results of the test. If the field is zero, the drive passed with no errors detected by the DST. If the field is not zero, the test failed for the reason reported in the field.

The drive will report the failure condition and LBA (if applicable) in the Self-test Results Log parameter. The Sense key, ASC, ASCQ, and FRU are used to report the failure condition.

5.2.10.2.5 Abort

There are several ways to abort a diagnostic. You can use a SCSI Bus Reset or a Bus Device Reset message to abort the diagnostic.

You can abort a DST executing in background mode by using the abort code in the DST Function Code field. This will cause a 01 (self-test aborted by the application client) code to appear in the self-test results values log. All other abort mechanisms will be reported as a 02 (self-test routine was interrupted by a reset condition).

5.2.11 Product warranty

Beginning on the date of shipment to customer and continuing for a period of five years, Seagate warrants that each product (including components and subassemblies) or spare part that fails to function properly under normal use due to defect in materials on workmanship or due to nonconformance to the applicable specifications will be repaired or replaced, at Seagate's option and at no charge to customer, if returned by customer at customer's expense to Seagate's designated facility in accordance with Seagate's warranty procedure. Seagate will pay for transporting the repair or replacement item to customer. For more detailed warranty information refer to the Standard terms and conditions of Purchase for Seagate products.

Shipping

When transporting or shipping a drive, a Seagate approved container must be used. Keep your original box. They are easily identified by the Seagate-approved package label. Shipping a drive in a non-approved container voids the drive warranty.

Seagate repair centers may refuse receipt of components improperly packaged or obviously damaged in transit. Contact your Authorized Seagate Distributor to purchase additional boxes. Seagate recommends shipping by an air-ride carrier experienced in handling computer equipment.

Product repair and return information

Seagate customer service centers are the only facilities authorized to service Seagate drives. Seagate does not sanction any third-party repair facilities. Any unauthorized repair or tampering with the factory-seal voids the warranty.

6.0 Physical/electrical specifications

This section provides information relating to the physical and electrical characteristics of the Cheetah X15 drive.

6.1 AC power requirements

None.

6.2 DC power requirements

The voltage and current requirements for a single drive are shown in the following table. Values indicated apply at the drive power connector. The table shows current values in Amperes.

Table 3: DC power requirements

	Notes	ST318451				ST39251			
		SE mode		LVD mode		SE mode		LVD mode	
Voltage		+5 V	+12 V	+5 V	+12 V	+5 V	+12 V	+5 V	+12 V
Regulation	[5]	±5%	±5%[2]	±5%	±5%[2]	±5%	±5%[2]	±5%	±5%[2]
Average idle current DC $\overline{X}$	[1][7]	0.61	0.61	0.68	0.61	0.61	0.52	0.68	0.52
Maximum starting current									
(peak DC) DC	[3]	0.67	1.42	0.73	1.42	0.67	1.66	0.74	1.66
(peak AC) AC	[3]	0.94	3.26	1.01	3.26	0.94	3.35	1.01	3.35
Delayed motor start (max) DC	[1][4]	0.51	0.03	0.57	0.03	0.53	0.03	0.59	0.03
Peak operating current									
DC $\overline{X}$	[1][6]	0.67	1.05	0.8	1.05	0.66	0.92	0.79	0.92
Maximum DC	[1]	0.70	1.15	0.81	1.15	0.70	1.07	0.83	1.07
Maximum (peak) DC		1.08	2.29	1.41	2.29	1.08	2.29	1.41	2.29

[1] Measured with average reading DC ammeter or equivalent sampling scope. Instantaneous current peaks will exceed these values. Power supply at nominal voltage. N = 6, 22 Degrees C ambient.

[2] For +12 V, a –10% tolerance is permissible during initial start of spindle, and must return to ±5% before 15,000 rpm is reached. The ±5% must be maintained after the drive signifies that its power-up sequence has been completed and that the drive is able to accept selection by the host initiator.

[3] See +12 V current profile in Figure 3.

[4] This condition occurs when the Motor Start Option is enabled and the drive has not yet received a Start Motor command.

[5] See Section 6.2.1 “Conducted Noise Immunity.” Specified voltage tolerance is inclusive of ripple, noise, and transient response.

[6] Operating condition is defined as random 8 block reads at 261 I/Os per second (277 I/Os per second for ST39251 models). Current and power specified at nominal voltages. Decreasing +5 volts by 5% increases 5 volt current by 3.2%. Decreasing +12 volt supply by 5% increases 12 volt current by 1.4% (2% for ST39251 models).

[7] During idle, the drive heads are relocated every 60 seconds to a random location within the band from three-quarters to maximum track.

General Notes from Table 3:

1. Minimum current loading for each supply voltage is not less than 1.9% of the maximum operating current shown.
2. The +5 and +12 volt supplies shall employ separate ground returns.
3. Where power is provided to multiple drives from a common supply, careful consideration for individual drive power requirements should be noted. Where multiple units are powered on simultaneously, the peak starting current must be available to each device.
4. Parameters, other than spindle start, are measured after a 10-minute warm up.
5. No terminator power.

6.2.1 Conducted noise immunity

Noise is specified as a periodic and random distribution of frequencies covering a band from DC to 10 MHz. Maximum allowed noise values given below are peak to peak measurements and apply at the drive power connector.

+5 V = 150 mV pp from 0 to 100 kHz and 100 mV pp from 100 kHz to 10 MHz.
+12 V = 150 mV pp from 0 to 100 kHz and 100 mV pp from 100 kHz to 10 MHz.

6.2.2 Power sequencing

The drive does not require power sequencing. The drive protects against inadvertent writing during power-up and down. Daisy-chain operation requires that power be maintained on the SCSI bus terminator to ensure proper termination of the peripheral I/O cables. To automatically delay motor start based on the target ID (SCSI ID) enable the Delay Motor Start option and disable the Enable Motor Start option on the J2 connector. See Section 8.1 for pin selection information. To delay the motor until the drive receives a Start Unit command, enable the Enable Remote Motor Start option on the J2 connector.

6.2.3 12 V - Current profile

Figure 3 identifies the drive +12 V current profile. The current during the various times is as shown:

T0 - Power is applied to the drive.
T1 - Controller self tests are performed.
T2 - Spindle begins to accelerate under current limiting after performing drive internal diagnostics. See Note 1 of Table 2.
T3 - The spindle is up to speed and the head-arm restraint is unlocked.
T4 - The adaptive servo calibration sequence is performed.
T5 - Calibration is complete and drive is ready for reading and writing.

Note. All times and currents are typical. See Table 3 for maximum current requirements.

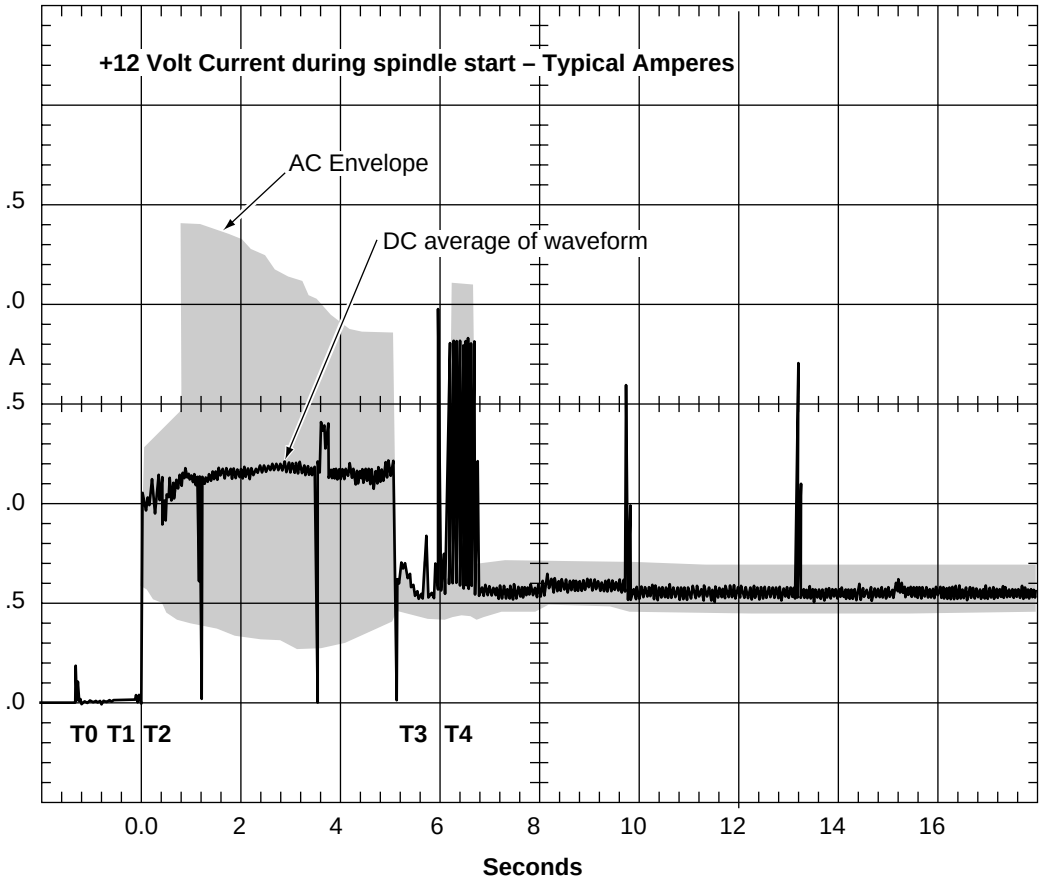

Figure 3. Typical ST318451 drive +12 V current profile

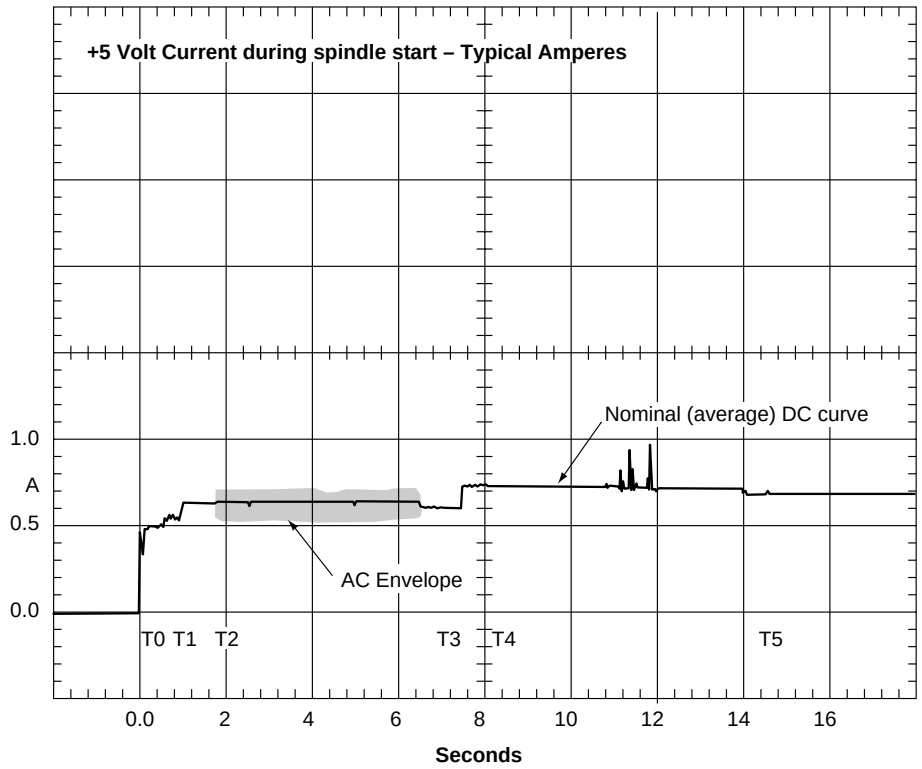

Figure 4. Typical ST318451 drive +5 V current profile

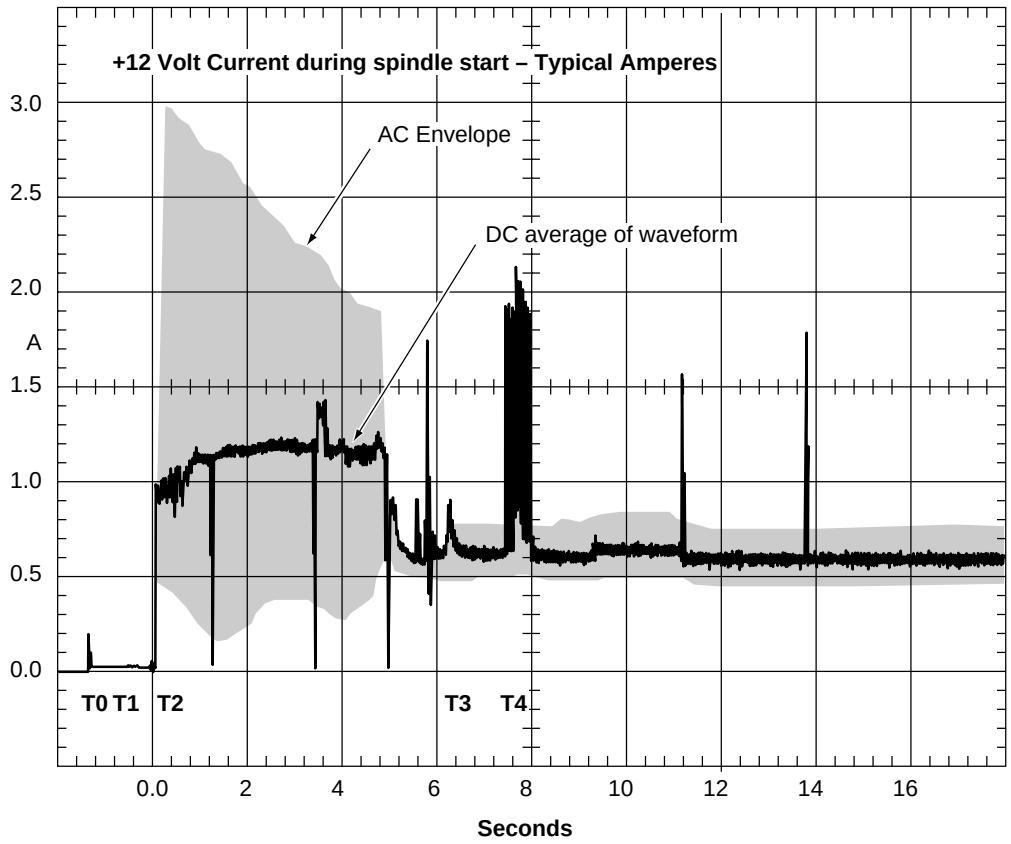

Figure 5. Typical ST39251 drive +12 V current profile

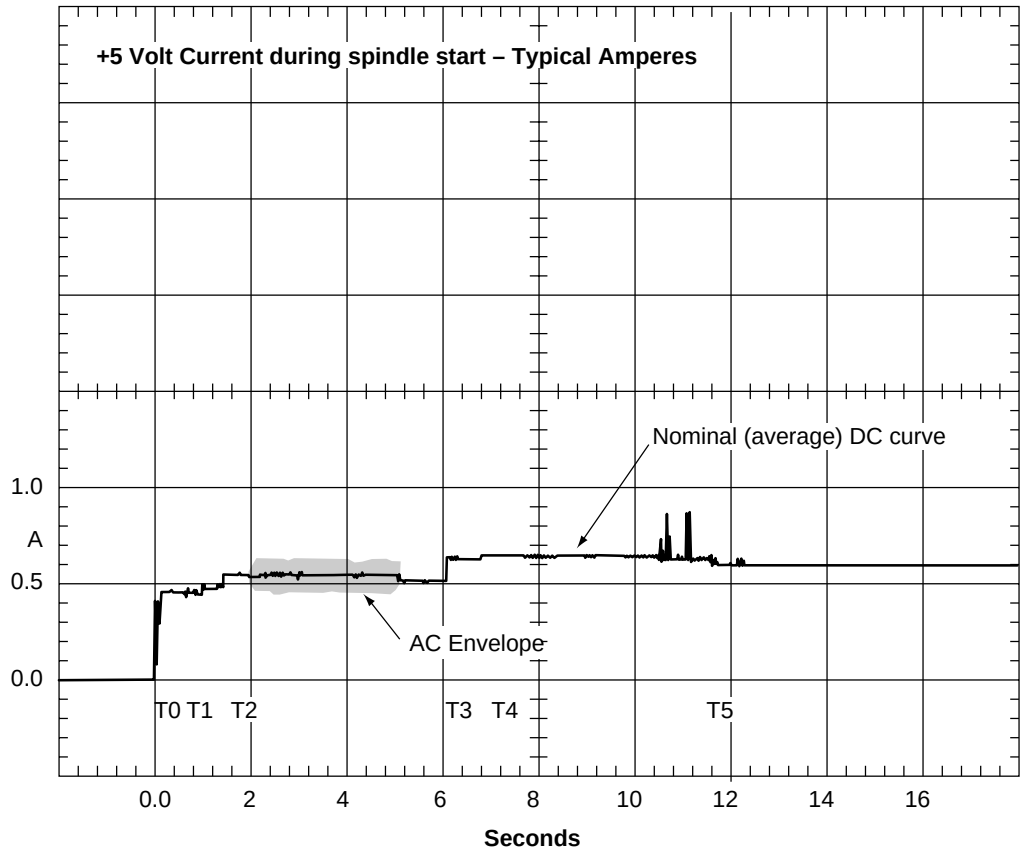

Figure 6. Typical ST39251 drive +5 V current profile

6.3 Power dissipation

ST318451

For drives using single-ended interface circuits, typical power dissipation under idle conditions is 10.32 watts (35.2 BTUs per hour).

For drives using low voltage differential interface circuits, typical power dissipation under idle conditions is 10.7 watts (36.6 BTUs per hour).

To obtain operating power for typical random read operations, refer to the following two I/O rate curves (see Figures 7 and 8). Locate the typical I/O rate for a drive in your system on the horizontal axis and read the corresponding +5 volt current, +12 volt current, and total watts on the vertical axis. To calculate BTUs per hour, multiply watts by 3.4123.

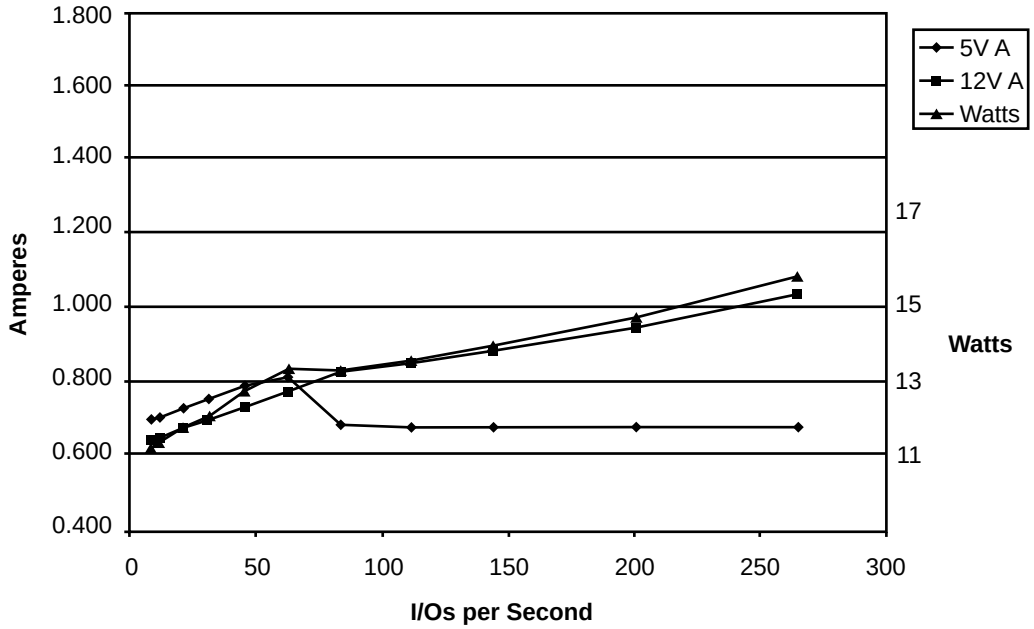

Figure 7. ST318451 DC current and power vs. input/output operations per second (SE)

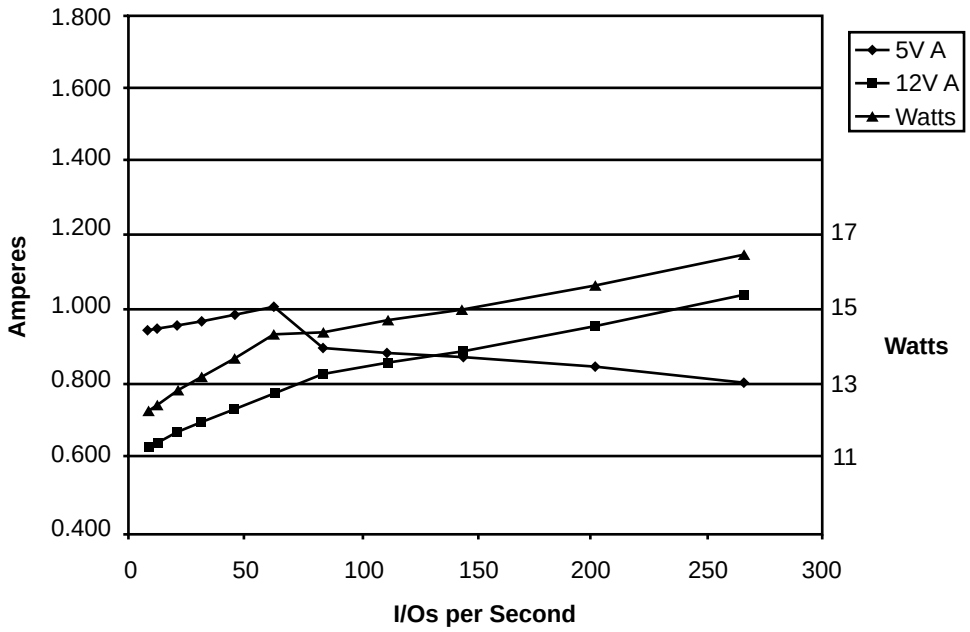

Figure 8. ST318451 DC current and power vs. input/output operations per second (LVD)

ST39251

For drives using single-ended interface circuits, typical power dissipation under idle conditions is 10.32 watts (35.2 BTUs per hour).

For drives using low voltage differential interface circuits, typical power dissipation under idle conditions is 10.7 watts (36.6 BTUs per hour).

To obtain operating power for typical random read operations, refer to the following two I/O rate curves (see Figures 7 and 8). Locate the typical I/O rate for a drive in your system on the horizontal axis and read the corresponding +5 volt current, +12 volt current, and total watts on the vertical axis. To calculate BTUs per hour, multiply watts by 3.4123.

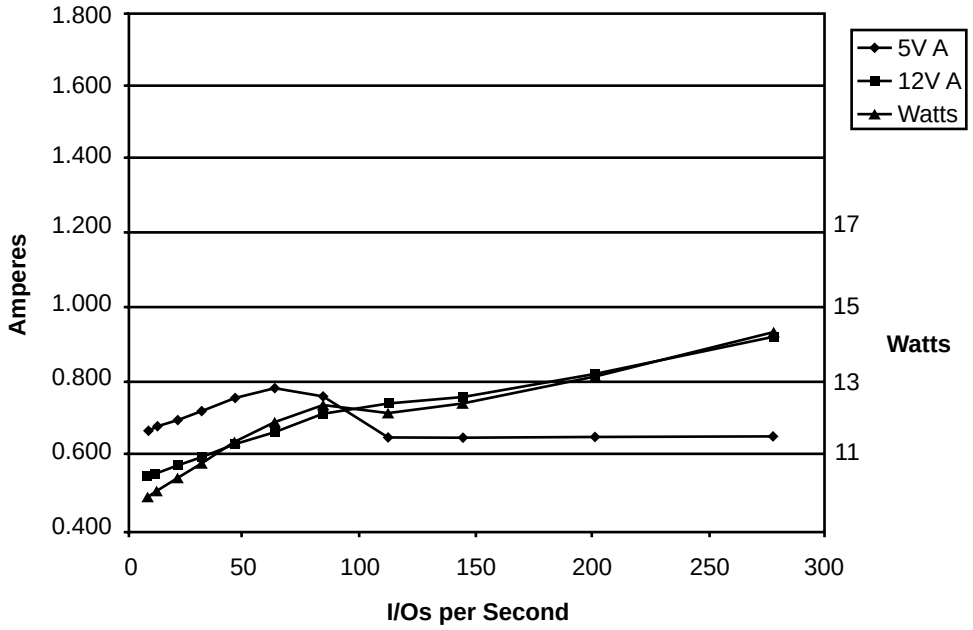

Figure 9. ST39251 DC current and power vs. input/output operations per second (SE)

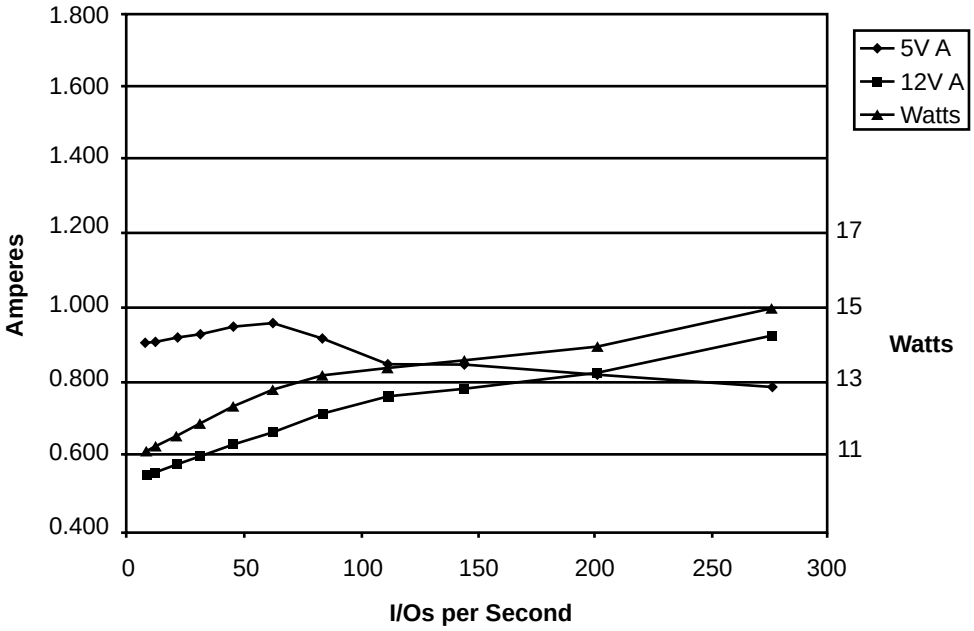

Figure 10. ST39251 DC current and power vs. input/output operations per second (LVD)

6.4 Environmental limits

Temperature and humidity values experienced by the drive must be such that condensation does not occur on any drive part. Altitude and atmospheric pressure specifications are referenced to a standard day at 58.7°F (14.8°C). Maximum wet bulb temperature is 82°F (28°C).

6.4.1 Temperature

a. Operating

With cooling designed to maintain the case temperatures of Table 4, the drive meets all specifications over a 41°F to 131°F (5°C to 55°C) drive ambient temperature range with a maximum temperature gradient of 36°F (20°C) per hour. The enclosure for the drive should be designed such that the temperatures at the locations specified in Table 4 are not exceeded. Air flow may be needed to achieve these temperature values (see Section 8.3 and 8.3.1). Operation at case temperatures above these values may adversely affect the drives ability to meet specifications.

The MTBF specification for the drive is based on operating in an environment that ensures that the case temperatures specified in Table 4 are not exceeded. Occasional excursions to drive ambient temperatures of 131°F (50°C) or 41°F (5°C) may occur without impact to specified MTBF. Air flow may be needed to achieve these temperatures (see Section 8.3.1). Continual or sustained operation at case temperatures above these values may degrade MTBF.

To confirm that the required cooling for the electronics and HDA is provided, place the drive in its final mechanical configuration, perform random write/read operations. After the temperatures stabilize, measure the case temperature of the components listed in Table 4 (see note [2]).

The maximum allowable HDA case temperature is 65°C. Operation of the drive at the maximum case temperature is intended for short time periods only. Continuous operation at the elevated temperatures will reduce product reliability.

Table 4: PCBA and HDA temperatures

Items in Figure 11	Maximum allowable case temperature (°C) operating	Maximum allowable case [3] temperatures (°C) to meet MTBF spec.
HDA [2]	65	50
U5	103.3	83.3
U14	80.8	60.8
U11	63.9	43.9
U20	79.6	59.6

Notes.

[1] Section 8.3.1 describes the air-flow patterns used when generating the 1,200,000 hours MTBF guidelines in column 2. Air flow was opposite that shown in Section 8.3.1. Local air velocity was 0.92 m/sec (180 lfpm). Inlet air temperature to the drive was 77°F (25°C), plus 9°F (5°C) temperature rise in the test enclosure (86°F/30°C ambient local to the drive).

[2] Measure HDA temp at point labeled “HDA” on Figure 11.

[3] PCB mounted integrated circuit case.

b. Non-operating

–40° to 158°F (–40° to 70°C) package ambient with a maximum gradient of 36°F (20°C) per hour. This specification assumes that the drive is packaged in the shipping container designed by Seagate for use with drive.

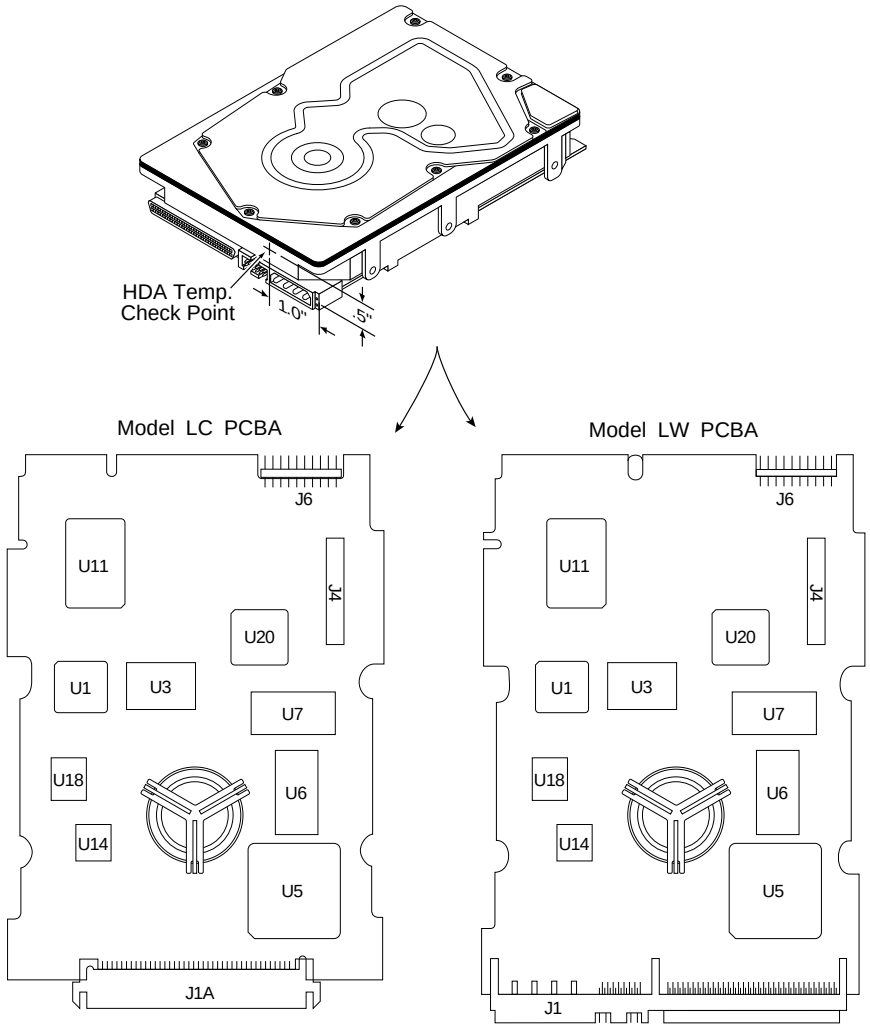

Figure 11. Locations of PCBA components listed in Table 4

6.4.2 Relative humidity

The values below assume that no condensation on the drive occurs.

a. Operating

5% to 95% non-condensing relative humidity with a maximum gradient of 10% per hour.

b. Non-operating

5% to 95% non-condensing relative humidity.

6.4.3 Effective altitude (sea level)

a. Operating

–1,000 to +10,000 feet (–305 to +3,048 meters)

b. Non-operating

–1,000 to +40,000 feet (–305 to +12,210 meters)

6.4.4 Shock and vibration

Shock and vibration limits specified in this document are measured directly on the drive chassis. If the drive is installed in an enclosure to which the stated shock and/or vibration criteria is applied, resonances may occur internally to the enclosure resulting in drive movement in excess of the stated limits. If this situation is apparent, it may be necessary to modify the enclosure to minimize drive movement.

The limits of shock and vibration defined within this document are specified with the drive mounted by any of the four methods shown in Figure 12, and in accordance with the restrictions of Section 8.4. Orientation of the side nearest the LED may be up or down.

6.4.4.1 Shock

a. Operating—normal

The drive, as installed for normal operation, shall operate error free while subjected to intermittent shock not exceeding 15.0 Gs at a maximum duration of 11 msec (half sinewave). The drive, as installed for normal operation, shall operate error free while subjected to intermittent shock not exceeding 65.0 Gs at a maximum duration of 2 msec (half sinewave). Shock may be applied in the X, Y, or Z axis.

b. Operating—abnormal

Equipment, as installed for normal operation, does not incur physical damage while subjected to intermittent shock not exceeding 40 Gs at a maximum duration of 11 msec (half sinewave). Shock occurring at abnormal levels may promote degraded operational performance during the abnormal shock period. Specified operational performance will continue when normal operating shock levels resume. Shock may be applied in the X, Y, or Z axis. Shock is not to be repeated more than two times per second.

c. Non-operating

The limits of non-operating shock shall apply to all conditions of handling and transportation. This includes both isolated drives and integrated drives.

The drive subjected to nonrepetitive shock not exceeding 75 Gs at a maximum duration of 11 msec (half sinewave) shall not exhibit device damage or performance degradation. Shock may be applied in the X, Y, or Z axis.

The drive subjected to nonrepetitive shock not exceeding 250 Gs at a maximum duration of 2 msec (half sinewave) does not exhibit device damage or performance degradation. Shock may be applied in the X, Y, or Z axis.

The drive subjected to nonrepetitve shock not exceeding 125 Gs at a maximum duration of 0.5 msec (half sinewave) does not exhibit device damage or performance degradation. Shock may be applied in the X, Y, or Z axis.

d. Packaged

Disc drives shipped as loose load (not palletized) general freight will be packaged to withstand drops from heights as defined in the table below. For additional details refer to Seagate specifications 30190-001 (under 100 lbs/45 kg) or 30191-001 (over 100 lbs/45 Kg).

Package size	Packaged/product weight	Drop height
<600 cu in (<9,800 cu cm)	Any	60 in (1524 mm)
600-1800 cu in (9,800-19,700 cu cm)	0-20 lb (0 to 9.1 kg)	48 in (1219 mm)
>1800 cu in (>19,700 cu cm)	0-20 lb (0 to 9.1 kg)	42 in (1067 mm)
>600 cu in (>9,800 cu cm)	20-40 lb (9.1 to 18.1 kg)	36 in (914 mm)

Drives packaged in single or multipacks with a gross weight of 20 pounds (8.95 kg) or less by Seagate for general freight shipment shall withstand a drop test from 48 inches (1,070 mm) against a concrete floor or equivalent.

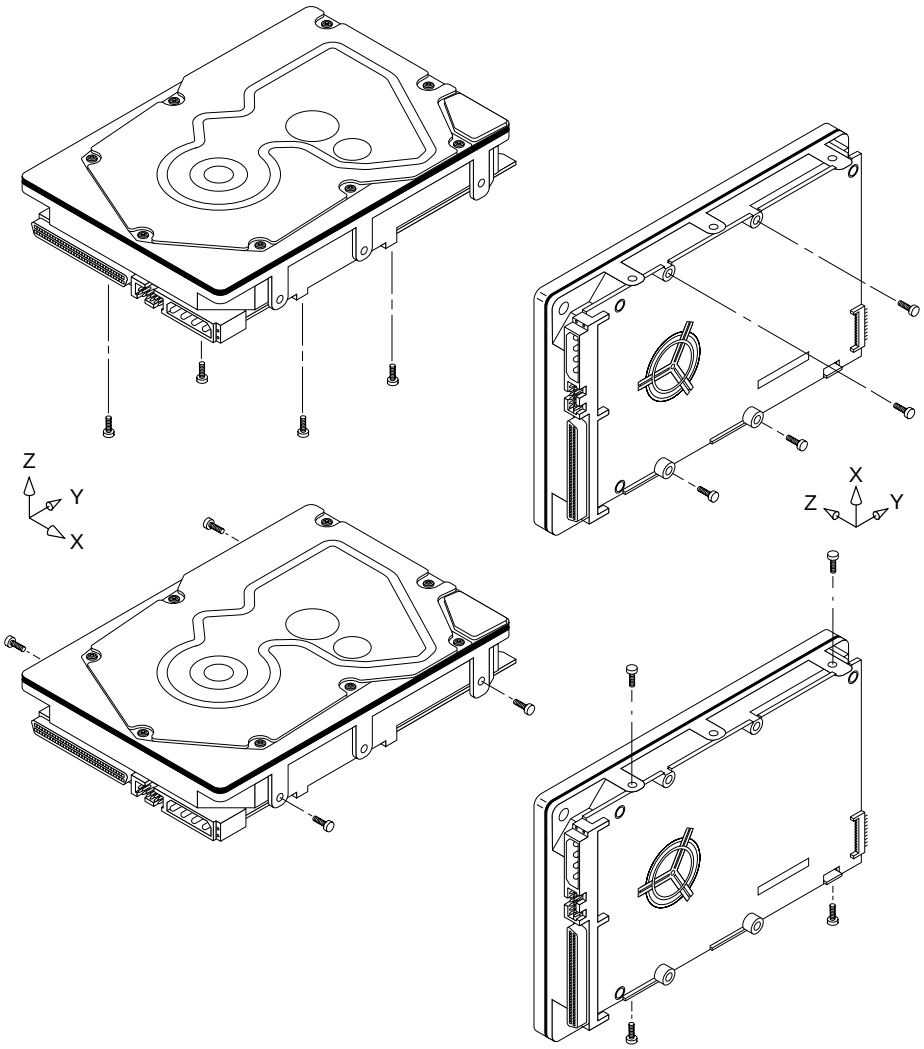

Figure 12. Recommended mounting

6.4.4.2 Vibration

a. Operating - normal

The drive as installed for normal operation, shall comply with the complete specified performance while subjected to continuous vibration not exceeding

5-500 Hz @ 0.5 G (zero to peak)

Vibration may be applied in the X, Y, or Z axis.

Operating normal translational random flat profile

10 - 400 Hz	0.4 GRMS

b. Operating - abnormal

Equipment as installed for normal operation shall not incur physical damage while subjected to periodic vibration not exceeding:

15 minutes of duration at major resonant frequency

5-500 Hz @ 0.75 G (X, Y, or Z axis, zero to peak)

Vibration occuring at these levels may degrade operational performance during the abnormal vibration period. Specified operational performance will continue when normal operating vibration levels are resumed. This assumes system recovery routines are available.

Operating abnormal translational random flat profile

10 - 400 Hz	1.2 GRMS

c. Non-operating

The limits of non-operating vibration shall apply to all conditions of handling and transportation. This includes both isolated drives and integrated drives.

The drive shall not incur physical damage or degraded performance as a result of continuous vibration not exceeding

5-22 Hz @ 0.040 inches (1.02 mm) displacement (zero to peak)
22-500 Hz @ 2.00 G (zero to peak)

Vibration may be applied in the X, Y, or Z axis.

Non-operating translational random flat profile

10 - 400 Hz	1.2 GRMS

6.4.5 Air cleanliness

The drive is designed to operate in a typical office environment with minimal environmental control.

6.4.6 Acoustics

Sound power during idle mode shall be 4.0 bels typical when measured to ISO 7779 specification.

There will not be any discrete tones more than 10 dB above the masking noise on typical drives when measured according to Seagate specification 30553-001. There will not be any tones more than 24 dB above the masking noise on any drive.

6.4.7 Electromagnetic susceptibility

See Section 2.1.2.

6.5 Mechanical specifications

The following nominal dimensions are exclusive of the decorative front panel accessory. However, dimensions of the front panel are shown in figure below. Refer to Figures 13 and 14 for detailed mounting configuration dimensions. See Section 8.4, “Drive mounting.”

Height:	1.000 in	25.4 mm
Width:	4.000 in	101.6 mm
Depth:	5.75 in	146.05 mm
Weight:	1.6 pounds	0.726 kilograms

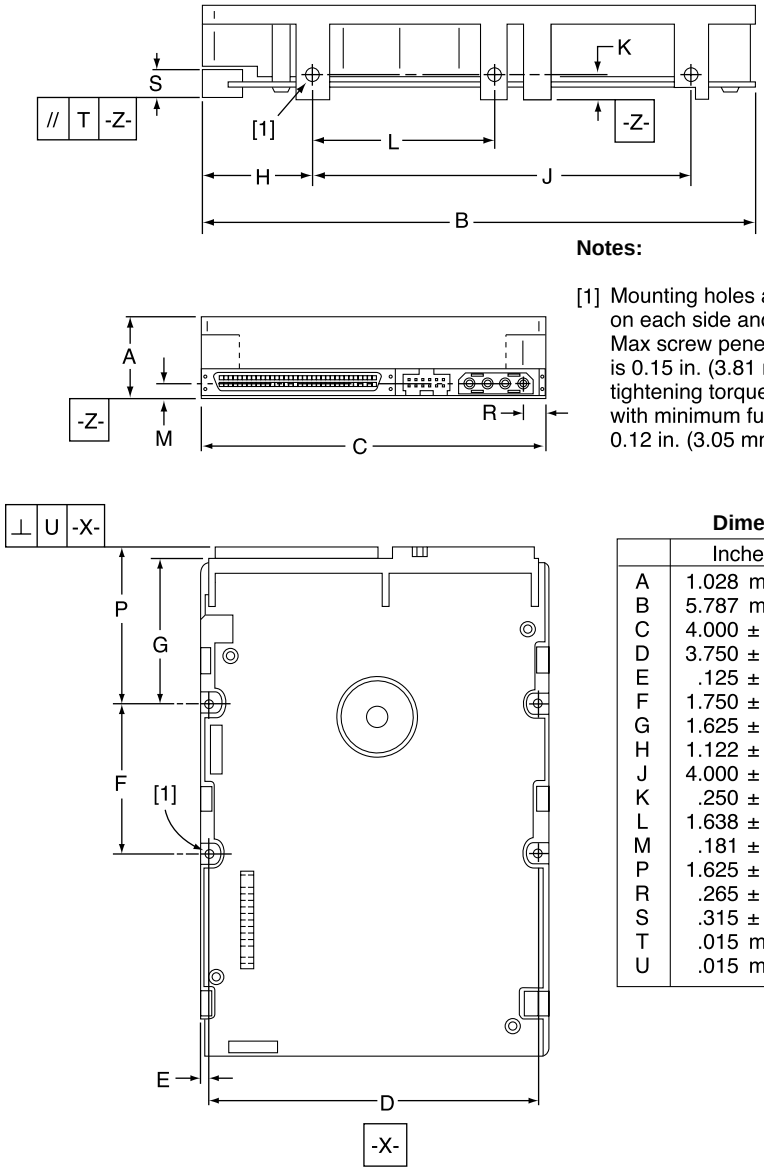

Notes:

[1] Mounting holes are 6-32 UNC 2B, three on each side and four on the bottom. Max screw penetration into side of drive is 0.15 in. (3.81 mm). Max screw tightening torque is 8.0 in-lb (4.43 nm) with minimum full thread engagement of 0.12 in. (3.05 mm).

Dimension Table

	Inches	Millimeters
A	1.028 max	26.10 max
B	5.787 max	147.00 max
C	4.000 ± .010	101.60 ± .25
D	3.750 ± .010	92.25 ± .25
E	.125 ± .010	3.18 ± .25
F	1.750 ± .010	44.45 ± .25
G	1.625 ± .020	41.28 ± .50
H	1.122 ± .020	28.50 ± .50
J	4.000 ± .010	101.60 ± .25
K	.250 ± .010	6.35 ± .25
L	1.638 ± .010	41.60 ± .25
M	.181 ± .020	4.60 ± .50
P	1.625 ± .020	41.28 ± .50
R	.265 ± .010	6.73 ± .25
S	.315 ± .040	7.00 ± 1.02
T	.015 max	0.38 max
U	.015 max	0.38 max

Figure 13. LW mounting configuration dimensions

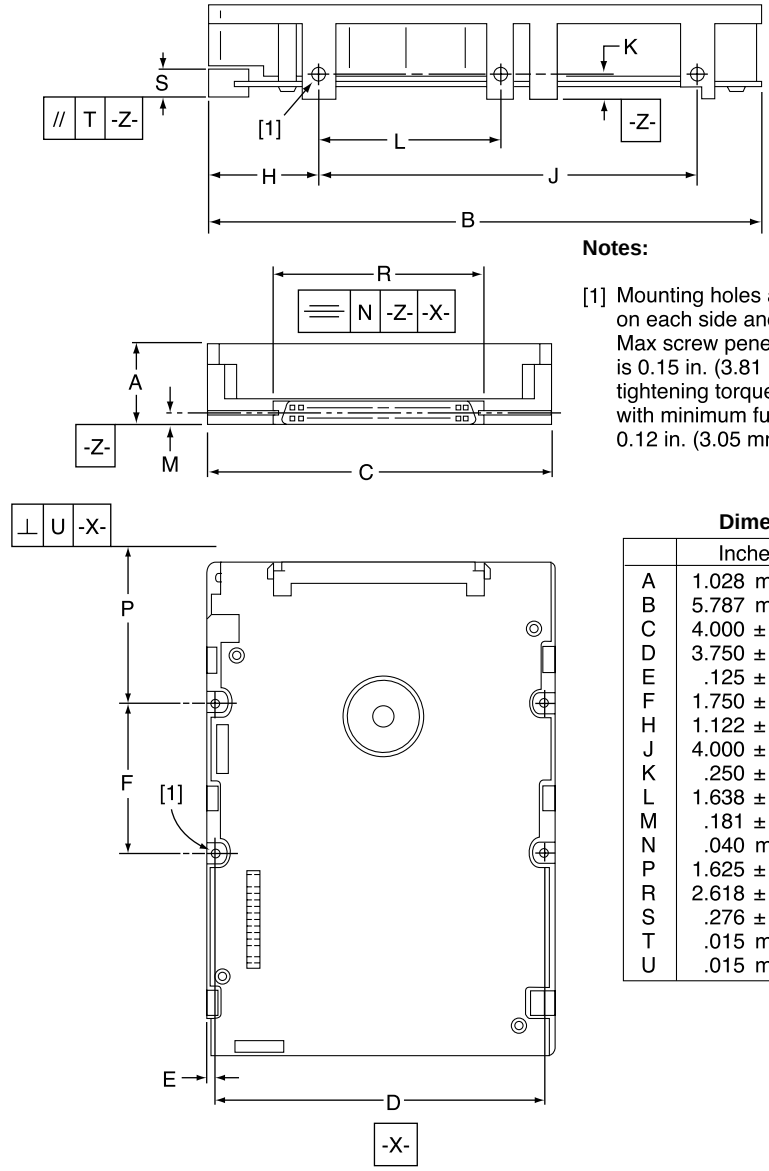

Notes:

[1] Mounting holes are 6-32 UNC 2B, three on each side and four on the bottom. Max screw penetration into side of drive is 0.15 in. (3.81 mm). Max screw tightening torque is 8.0 in-lb (4.43 nm) with minimum full thread engagement of 0.12 in. (3.05 mm).

Dimension Table

	Inches	Millimeters
A	1.028 max	26.10 max
B	5.787 max	147.00 max
C	4.000 ± .010	101.60 ± .25
D	3.750 ± .010	92.25 ± .25
E	.125 ± .010	3.18 ± .25
F	1.750 ± .010	44.45 ± .25
H	1.122 ± .020	28.50 ± .50
J	4.000 ± .010	101.60 ± .25
K	.250 ± .010	6.35 ± .25
L	1.638 ± .010	41.60 ± .25
M	.181 ± .020	4.60 ± .50
N	.040 max	1.20 max
P	1.625 ± .020	41.28 ± .50
R	2.618 ± .010	66.50 ± .25
S	.276 ± .040	7.00 ± 1.02
T	.015 max	0.38 max
U	.015 max	0.38 max

Figure 14. LC mounting configuration dimensions

7.0 Defect and error management

The drive, as delivered, complies with this specification. The read error rate and specified storage capacity are not dependent upon use of defect management routines by the host (initiator).

Defect and error management in the SCSI system involves the drive internal defect/error management and SCSI systems error considerations (errors in communications between Initiator and the drive). Tools for use in designing a defect/error management plan are briefly outlined in this section, with references to other sections where further details are given.

7.1 Drive internal defects

During the initial drive format operation at the factory, media defects are identified, tagged as being unusable, and their locations recorded on the drive primary defects list (referred to as the “P” list and also as the ETF defect list). At factory format time, these known defects are also reallocated, that is, reassigned to a new place on the medium and the location listed in the defects reallocation table. The “P” list is not altered after factory formatting. Locations of defects found and reallocated during error recovery procedures after drive shipment are listed in the “G” list (defects growth list). The “P” and “G” lists may be referenced by the initiator using the Read Defect Data command (see the *SCSI Interface Product Manual*).

7.2 Drive error recovery procedures

Whenever an error occurs during drive operation, the drive, if programmed to do so, performs error recovery procedures to attempt to recover the data. The error recovery procedures used depend on the options previously set up in the error recovery parameters mode page. Error recovery and defect management may involve the use of several SCSI commands, the details of which are described in the *SCSI Interface Product Manual.* The drive implements selectable error recovery time limits such as are required in video applications. For additional information on this, refer to the Error Recovery Page table in the *SCSI Interface Product Manual*, which describes the Mode Select/Mode Sense Error Recovery parameters.

The error recovery scheme supported by the drive provides a means to control the total error recovery time for the entire command in addition to controlling the recovery level for a single LBA. The total amount of time spent in error recovery for a command can be limited via the Recovery Time Limit bytes in the Error Recovery Mode Page. The total amount of time spent in error recovery for a single LBA can be limited via the Read Retry Count or Write Retry Count bytes in the Error Recovery Mode Page.

The drive firmware error recovery algorithms consist of 11 levels for read recoveries and 5 levels for writes.

Table 5 equates the Read and Write Retry Count with the maximum possible recovery time for read and write recovery of individual LBAs. The times given do not include time taken to perform reallocations, if reallocations are performed. Reallocations are performed when the ARRE bit (for reads) or AWRE bit (for writes) is one, the RC bit is zero, and the Recovery Time Limit for the command has not yet been met. Time needed to perform reallocation is not counted against the Recovery Time Limit.

The Read Continuous (RC) bit, when set to one, requests the disc drive to transfer the requested data length without adding delays (for retries or ECC correction) that may be required to insure data integrity. The disc drive may send erroneous data in order to maintain the continuous flow of data. The RC bit should only be used when data integrity is not a concern and speed is of utmost importance. If the Recovery Time Limit or retry count is reached during error recovery, the state of the RC bit is examined. If the RC bit is set, the drive will transfer the unrecovered data with no error indication and continue to execute the remaining command. If the RC bit is not set, the drive will stop data transfer with the last good LBA, and report a “Check Condition, Unrecovered Read Error.”

Table 5: Read and write retry count maximum recovery times [1]

Read retry count [1]	Maximum recovery time per LBA (cumulative, msec)
0	52.4
1	60.4
2	205.5
3	221.6
4	253.7
5	286.0
6	350.4
7	451.1
8	467.2
9	503.5
10	552.4
11 (default)	1,245.3

Write retry count	Maximum recovery time per LBA (cumulative, msec)
0	24.2
1	36.3
2	40.3
3	52.4
4	129.0
5 (default)	157.2

[1] These values are subject to change.

Setting these retry counts to a value below the default setting could result in an increased unrecovered error rate which may exceed the value given in this product manual. A setting of zero (0) will result in the drive not performing error recovery.

For example, suppose the Read/Write Recovery page has the RC bit set to 0, read retry count set to 4, and the recovery time limit field (Mode Sense page 01, bytes 10 and 11) set to FF FF hex (maximum). A four LBA Read command is allowed to take up to 346 msec recovery time for each of the four LBAs in the command. If the recovery time limit is set to 00 C8 hex (200 msec decimal) a four LBA read command is allowed to take up to 200 msec for all error recovery within that command. The use of the Recovery Time Limit field allows finer granularity on control of the time spent in error recovery. The recovery time limit only starts counting when the drive is executing error recovery and it restarts on each command. Therefore, each command's total recovery time is subject to the recovery time limit. Note: A recovery time limit of 0 will use the drive's default value of FF FF. Minimum recovery time limit is achieved by setting the Recovery Time Limit field to 00 01.

7.3 SCSI systems errors

Information on the reporting of operational errors or faults across the interface is given in the *SCSI Interface Product Manual*. Message Protocol System is described in the *SCSI Interface Product Manual*. Several of the messages are used in the SCSI systems error management system. The Request Sense command returns information to the host about numerous kinds of errors or faults. The Receive Diagnostic Results reports the results of diagnostic operations performed by the drive.

Status returned by the drive to the Initiator is described in the *SCSI Interface Product Manual*. Status reporting plays a role in the SCSI systems error management and its use in that respect is described in sections where the various commands are discussed.

8.0 Installation

Note. These drives are designed to be used only on single-ended (SE) or low voltage differential (LVD) busses. Do not install these drives on a high voltage differential (HVD) bus.

The first thing to do when installing a drive is to set the drive SCSI ID and set up certain operating options. This is usually done by installing small shorting jumpers on the pins of connectors J2 and J6 on the PCBA (or J1-Auxiliary on the LW model), or via the drive to host I/O signals on the LC model. Some users connect cables to J6 or J5-Auxiliary and perform the set-up using remote switches.

Configure drive options

For option jumper locations and definitions refer to Figures 15, 16, and 17. Drive default mode parameters are not normally needed for installation. Refer to Section 9.3.2 for default mode parameters if they are needed.

- Ensure that the SCSI ID of the drive is not the same as the host adapter. Most host adapters use SCSI ID 7 because ID 7 is the highest priority on both 8 and 16 bit data buses.
- If multiple devices are on the bus set the drive SCSI ID to one that is not presently used by other devices on the bus.
- If the drive is the only device on the bus, attach it to the end of the SCSI bus cable. The user, system integrator, or host equipment manufacturer must provide external terminators.

Note. For additional information about terminator requirements, refer to Sections 9.8 and 9.9.

- Set all appropriate option jumpers for desired operation prior to power on. If jumpers are changed after power has been applied, recycle the drive power to make the new settings effective.
- Installation instructions are provided by host system documentation or with any additionally purchased drive installation software. If necessary see Section 10 for Seagate support services telephone numbers.
- Do not remove the manufacturer's installed labels from the drive and do not cover with additional labels, as the manufacturer labels contain information required when servicing the product.

Formatting

- It is not necessary to low level format this drive. The drive is shipped from the factory low level formatted in 512 byte sectors.
- Reformat the drive if a different spare sector allocation scheme is selected.
- High level formatting the drive involves assigning one or more partitions or logical drives to the drive volume. Follow the instructions in the system manuals for the system into which the drive is to be installed.

8.1 Drive ID/option select header

Figures 15 and 16 show views of the drive ID select jumper connectors. Figure 17 shows the option select jumper connector for all models. Figure 15 shows the drive's J5-auxiliary jumper connector. Both J5-auxiliary and J6 have pins for selecting drive ID and for connecting the remote LED cable. Only one or the other should be used, although using both at the same time would not damage the drive. The notes following the figures describe the functions of the various jumper positions on the connectors J2, J5-Auxiliary and J6. Suggested part number for the jumpers used on J2 is Molex 52747-0211 (Seagate part number 77679052). A bag with the two jumper plug types is shipped with the standard OEM drives.

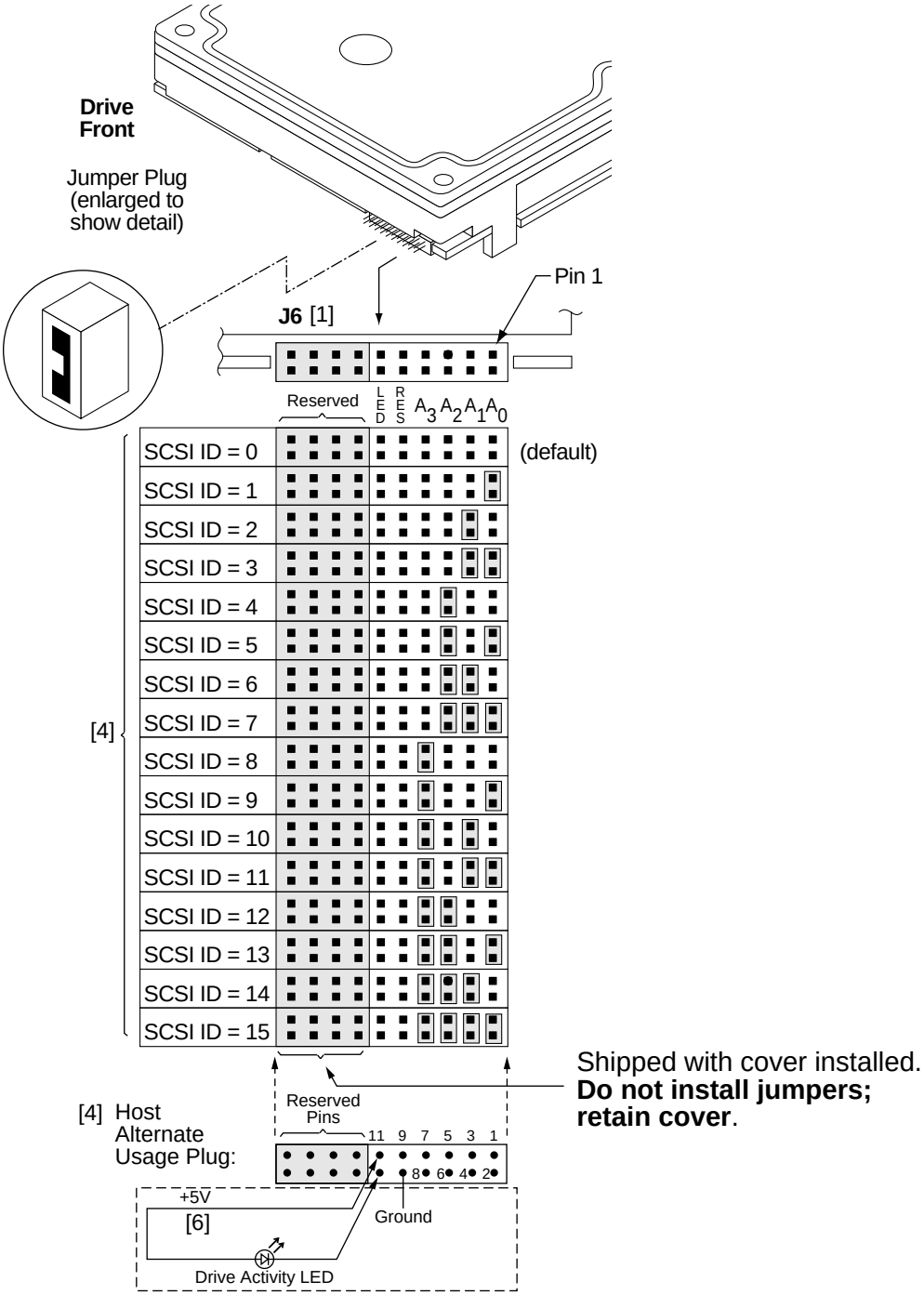

[4] Dashed area is optional host circuitry (external to the drive) connected to host supplied optional usage plug.
Do not connect anything to pins 13-20.

Figure 15. J6 jumper header

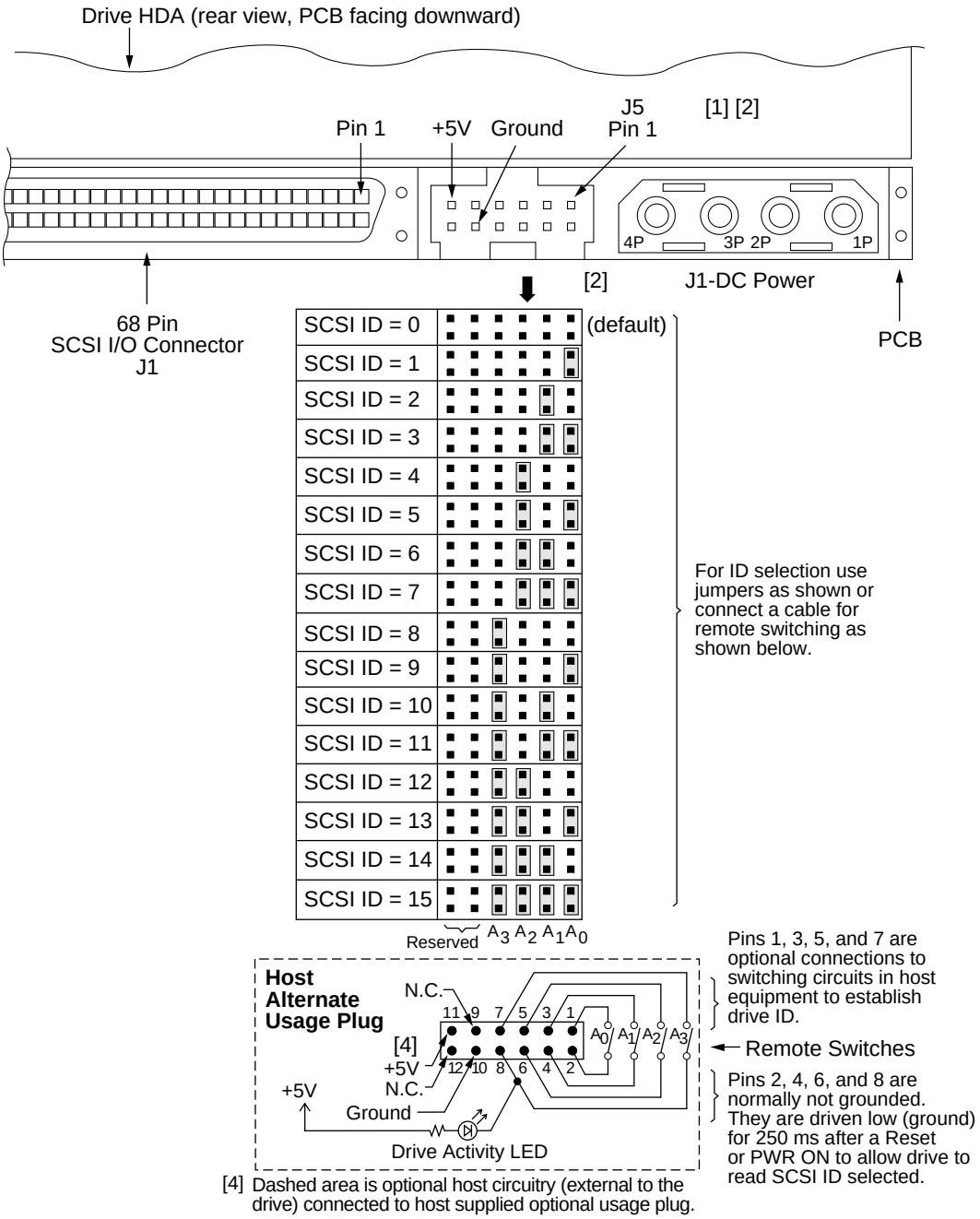

Figure 16. J5 jumper header (on LW models only)

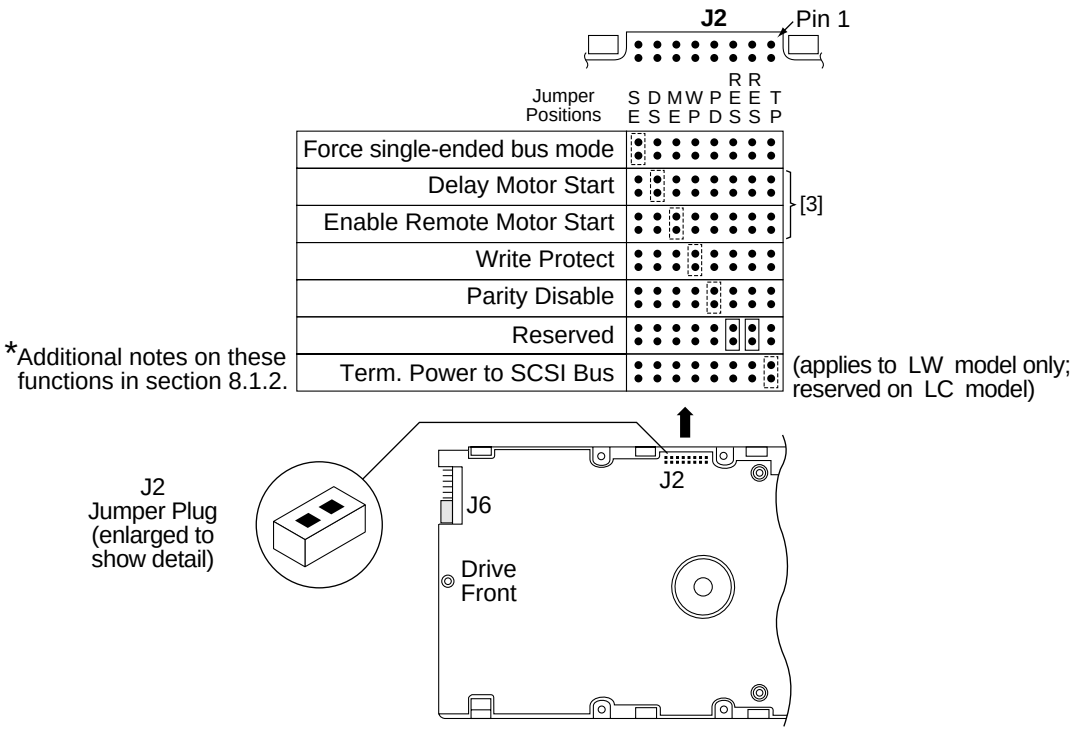

Figure 17. J2 option select header

8.1.1 Notes for Figures 15, 16, and 17.

[1] Notes explaining the functions of the various jumpers on jumper header connectors J2, J5, and J6 are given here and in Section 8.1.2. The term "**default**" means as standard OEM units are configured with a jumper on those positions when shipped from factory. "Off" means no jumper is installed; "On" means a jumper is installed. OFF or ON underlined is factory **default** condition.

The PCBA on LC models does not have connector J5. The J5 connector signals conform to SFF-8009 Revision 2.0, Unitized Connector for Cabled Drives, signal assignments for auxiliary connectors.

[2] These signals are also on 80-pin J1 I/O connector. See Tables 17 and 18.

[3] Voltage supplied by the drive.

8.1.2 Function description

J2 jumper installation		Jumper function description
SE		
On		Forces drive to use single-ended I/O drivers/receivers only.
Off		Drive can operate on the interface in low voltage differential mode or single-ended, depending on the voltage state of the I/O “DIFFSNS” line. **Default** is SE jumper not installed.
DS	**ME**	
Off	Off	Spindle starts immediately after power up - **Default** setting.
Off	On	Drive spindle does not start until Start Unit command received from host.
On	Off	Spindle Startup is delayed by SCSI ID times 12 seconds after power is applied, i.e., drive 0 spindle starts immediately when DC power connected, drive 1 starts after 12 second delay, drive 2 starts after 24 second delay, etc.
On	On	Drive spindle starts when Start Unit command received from host. Delayed start feature is overridden and does not apply when **ME** jumper is installed.
WP		
On		Entire drive is write protected.
Off		Drive is not write protected. **Default** is **WP** jumper not installed.
PD		
On		Parity checking and parity error reporting by the drive is disabled.
Off		Drive checks for parity and reports result of parity checking to host. **Default** is **PD** jumper not installed.
RES		
Off		Reserved jumper position. **Default** is no **RES** jumper installed.
TP1		**(Does not apply to LC model)**
Off		The drive does not supply terminator power to external terminators or to the SCSI bus I/O calbe.
On		Drive supplies power to SCSI bus I/O cable. When drives have differential I/O circuits, a jumper on the **TP1** position may be needed to power external terminators (see system documentation). These drives do not have terminator circuits on the drive.

8.2 Drive orientation

The balanced rotary arm actuator design of the drive allows it to be mounted in any orientation. All drive performance characterization, however, has been done with the drive in horizontal (discs level) and vertical (drive on its side) orientations, and these are the two preferred mounting orientations.

8.3 Cooling

Cabinet cooling must be designed by the customer so that the ambient temperature immediately surrounding the drive will not exceed temperature conditions specified in Section 6.4.1, “Temperature.” Specific consideration should be given to make sure adequate air circulation is present around the printed circuit board (PCB) to meet the requirements of Section 6.4.1, “Temperature.”

8.3.1 Air flow

The rack, cabinet, or drawer environment for the drive must provide heat removal from the electronics and head and disc assembly (HDA). You should confirm that adequate heat removal is provided using the temperature measurement guidelines described in Section 6.4.1.

Forced air flow may be required to keep temperatures at or below the specified case temperatures of Table 4, in which case the drive should be oriented, or air flow directed, so that the least amount of air flow resistance is created while providing air flow to the electronics and HDA. Also, the shortest possible path between the air inlet and exit should be chosen to minimize the travel length of air heated by the drive and other heat sources within the rack, cabinet, or drawer environment.

If forced air is determined to be necessary, possible air-flow patterns are shown in Figure 18. The air-flow patterns are created by one or more fans, either forcing or drawing air as shown in the illustrations. Conduction, convection, or other forced air-flow patterns are acceptable as long as the temperature measurement guidelines of Section 6.4.1 are met.

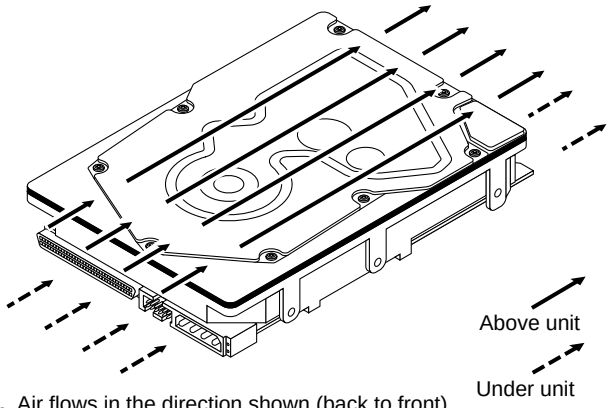

Note. Air flows in the direction shown (back to front) or in reverse direction (front to back)

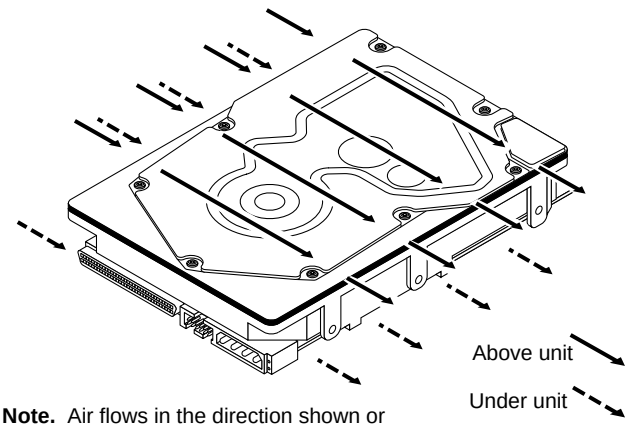

Note. Air flows in the direction shown or in reverse direction (side to side)

Figure 18. Air flow (suggested)

8.4 Drive mounting

When mounting the drive using the bottom holes (x-y plane in Figure 12) care must be taken to ensure that the drive is not physically distorted due to a stiff non-flat mounting surface. The allowable mounting surface stiffness is 80 lb/in (14.0 N/mm). The following equation and paragraph define the allowable mounting surface stiffness:

$$k * x = F \leq 15lb = 67N$$

where ‘k’ represents the mounting surface stiffness (units of lb/in or N/mm), and ‘x’ represents the out-of-plane mounting surface distortion (units of inches or millimeters). The out-of-plane distortion (‘x’) is determined by defining a plane with three of the four mounting points fixed and evaluating the out-of-plane deflection of the fourth mounting point when a known force (F) is applied to the fourth point.

Note. Before mounting the drive in any kind of 3.5-inch to 5.25-inch adapter frame, verify with Seagate Technology that the drive can meet the shock and vibration specifications given herein while mounted in such an adapter frame. Adapter frames that are available may not have a mechanical structure capable of mounting the drive so that it can meet the shock and vibration specifications listed in this manual.

8.5 Grounding

Signal ground (PCBA) and HDA ground are connected together in the drive and cannot be separated by the user. The equipment in which the drive is mounted is connected directly to the HDA and PCBA with no electrically isolating shock mounts. If it is desired for the system chassis to not be connected to the HDA/PCBA ground, the systems integrator or user must provide a nonconductive (electrically isolating) method of mounting the drive in the host equipment.

Increased radiated emissions may result if you do not provide the maximum surface area ground connection between system ground and drive ground. This is the system designer’s and integrator’s responsibility.

9.0 Interface requirements

This section partially describes the interface requirements as implemented on the drives.

9.1 General description

This section describes in essentially general terms the interface requirements supported by the Cheetah X15. No attempt is made to describe all of the minute details of conditions and constraints that must be considered by designers when designing a system in which this family of drives can properly operate. Seagate declares that the drives operate in accordance with the appropriate ANSI Standards referenced in various places herein, with exceptions as noted herein or in the Seagate *SCSI Interface Product Manual*.

9.2 SCSI interface messages supported

Table 6 lists the messages supported by the SCSI-2 and SCSI-3 modes of the Cheetah X15 family drives.

Table 6: SCSI messages supported by Cheetah X15 family drives

Message name	Message code	Supported by SCSI-2/3
Abort	06h	Y
Abort-tag	0Dh	Y
Bus device reset	0Ch	Y
Clear ACA	16h	N
Clear queue	0Eh	Y
Command complete	00h	Y
Continue I/O process	12h	Y
Disconnect	04h	Y
Extended messages	01h[1]	Y
Identify	80h-FFh	Y
Ignore wide residue (two bytes)	23h	Y
Initiate recovery	0Fh	N
Initiator detected error	05h	Y
Linked command complete	0Ah	Y
Linked command complete with flag	0Bh	Y
Message parity error	09h	Y
Message reject	07h	Y
Modify data pointer	[1]	N
No operation	08h	Y
Parallel Protocol Request	[1] [2]	Y
Queue tag messages (two bytes)		
ACA	24h	N
Head of queue tag	21h	Y
Ordered queue tag	22h	Y
Simple queue tag	20h	Y
Release recovery	10h	N
Restore pointers	03h	Y
Save data pointer	02h	Y
Synchronous data transfer req.	[1]	Y
Target transfer disable	13h	Y
Terminate I/O process	11h	Y
Wide data transfer request	[1]	Y

Notes.

[1] Extended messages (see the *SCSI Interface Product Manual*).

[2] Supports all options except qas_req and iu_req.

9.3 SCSI interface commands supported

Table 7 following lists the SCSI interface commands that are supported by the drive. Cheetah X15 Family drives can be changed back and forth between SCSI-1, SCSI-2, and SCSI-3 modes using the Change Definition Command. OEM standard drives are shipped set to operate in Ultra160 mode.

Table 7: Commands supported by Cheetah X15 family drive

Command name	Command code	Supported by SCSI-2/3
Change definition	40h	N
Compare	39h	N
Copy	18h	N
Copy and verify	3Ah	N
Format unit [1]	04h	Y
DPRY bit supported		N
DCRT bit supported		Y
STPF bit supported		Y
IP bit supported		Y
DSP bit supported		Y
IMMED bit supported		Y
VS (vendor specific)		N
Inquiry	12h	Y
Date code page (C1h)		Y
Firmware numbers page (C0h)		Y
Implemented operating def page (81h)		Y
Jumper settings page (C2h)		Y
Supported Vital product data page (00h)		Y
Unit serial number page (80h)		Y
Lock-unlock cache	36h	N
Log select	4Ch	Y
PCR bit		Y
DU bit		N
DS bit		Y
TSD bit		Y
ETC bit		N
TMC bit		N
LP bit		N
Log sense	4Dh	Y
Application client log page (0Fh)		Y
Cache statistics page (37h)		Y
Factory log page (3Eh)		Y
Non-medium error page (06h)		Y
Pages supported list (00h)		Y
Read error counter page (03h)		Y
Self-test results page (10h)		Y
Start-stop cycle counter page (0Eh)		Y
Temperature page (0Dh)		Y
Verify error counter page (05h)		Y
Write error counter page (02h)		Y
Factory log page (3Eh)		Y
Mode select (same pages as Mode Sense 1Ah)	15h	Y [2]
Mode select (10) (same pages as Mode Sense 1Ah)	55h	Y

Table 7: Commands supported by Cheetah X15 family drive (Continued)

Command name	Command code	Supported by SCSI-2/3
Mode sense	1Ah	Y [2]
Caching parameters page (08h)		Y
Control mode page (0Ah)		Y
Disconnect/reconnect (02h)		Y
Error recovery page (01h)		Y
Format page (03h)		Y
Information exceptions control page (1Ch)		Y
Notch and Partition Page (0Ch)		N
Power condition page (1Ah)		Y
Rigid disc drive geometry page (04h)		Y
Unit attention page (00h)		Y
Verify error recovery page (07h)		Y
Xor Control page (10h)		N
Mode sense (10) (same pages as Mode Sense 1Ah)	5Ah	Y
Prefetch	34h	N
Read	08h	Y
Read buffer (modes 0, 2, 3, Ah and Bh supported)	3Ch	Y
Read capacity	25h	Y
Read defect data (10)	37h	Y
Read defect data (12)	B7h	Y
Read extended	28h	Y
DPO bit supported		Y
FUA bit supported		Y
Read long	3Eh	Y
Reassign blocks	07h	Y
Receive diagnostic results	1Ch	Y
Supported diagnostics pages (00h)		Y
Translate page (40h)		Y
Release	17h	Y
Release (10)	57h	Y
Request sense	03h	Y
Actual retry count bytes		Y
Extended sense		Y
Field pointer bytes		Y
Reserve	16h	Y
3rd party reserve		Y
Extent reservation		N
Reserve (10)	56h	Y
3rd part reserve		Y
Extent reservation		N
Rezero unit	01h	Y
Search data equal	31h	N
Search data high	30h	N
Search data low	32h	N
Seek	0Bh	Y
Seek extended	2Bh	Y
Send diagnostics	1Dh	Y

Table 7: Commands supported by Cheetah X15 family drive (Continued)

Command name	Command code	Supported by SCSI-2/3
Supported diagnostics pages (00h)		Y
Translate page (40h)		Y
Set limits	33h	N
Start unit/stop unit (spindle ceases rotating) (1Ch)	1Bh	Y
Synchronize cache	35h	Y
Test unit ready	00h	Y
Verify	2Fh	Y
BYTCHK bit		Y
Write	0Ah	Y
Write and verify	2Eh	Y
DPO bit		Y
Write buffer (modes 0, 2, supported)	3Bh	Y
Firmware download option (modes 5, 7, Ah and Bh supported) [3]		Y
Write extended	2Ah	Y
DPO bit		Y
FUA bit		Y
Write long	3Fh	Y
Write same	41h	Y
PBdata		N
LBdata		N
XDRead	52h	N
XDWrite	50h	N
XPWrite	51h	N

[1] The drive can format to any even number of bytes per sector from 512 to 2,064.
[2] Tables 9 show how individual bits are set and which are changeable by the host.
[3] **WARNING:** A power loss during flash programming can result in firmware corruption. This usually makes the drive inoperable.

Table 8 lists the Standard Inquiry command data that the drive should return to the initiator per the format given in the *SCSI Interface Product Manual,* part number 75789509, Inquiry command section.

Table 8: Cheetah X15 family drive Standard Inquiry data

Bytes	Data (HEX)																
0-15	00	00	[02][1]	[12][2]	8B	00	[01]	[3E]	53	45	41	47	41	54	45	20	VENDOR ID
16-31	53	54	[33]	[31]	[38]	[34]	[35]	[31]	[4C]	[57]	[20][3]	20	20	20	20	20	PRODUCT ID
32-47	R#	R#	R#	R#	S#	S#	S#	S#	S#	S#	S#	S#	00	00	00	00	
48-63	00	00	00	00	00	00	00	00	00	00	00	00	00	00	00	00	
64-79	00	00	00	00	00	00	00	00	00	00	00	00	00	00	00	00	
80-95	00	00	00	00	00	00	00	00	00	00	00	00	00	00	00	00	
96-111	00	43	6F	70	79	72	69	67	68	74	20	28	63	29	20	[32]	COPYRIGHT
112-127	[30]	[30]	[30][5]	20	53	65	61	67	61	74	65	20	41	6C	6C	20	NOTICE
128-143	72	69	67	68	74	73	20	72	65	73	65	72	76	65	64	20	

[ ][1] 01 means SCSI-1 implemented.
02 means SCSI-2/SCSI-3 implemented.
03 means SCSI-3 (Ultra160) implemented.

[ ][2] The drive can be changed between these two configurations:
01 means response data in SCSI-1 format and has compatibility with Common Command Set data.
02 means response data in SCSI-2/SCSI-3 format.
12 means the drive uses the hierarchical addressing mode to assign LUNs to logical units (default is 12).

R# Four ASCII digits representing the last four digits of the product Firmware Release number. This information is also given in the Vital Product Data page C0h, together with servo RAM and ROM release numbers.

S# Eight ASCII digits representing the eight digits of the product serial number.

[ ][3] Bytes 18 through 26 reflect model of drive. Shown here are hex values for Model ST318451LW. For “LC” models, bytes 24, 25 and 26 are 4C 43 20.

[ ][5] Copyright Year - changes with actual year.

9.3.1 Inquiry Vital Product data

Instead of the standard Inquiry data shown in Table 8, the initiator can request several Vital Product Data pages by setting the Inquiry command EVPD bit to one. The *SCSI Interface Product Manual* lists the Vital Product Data pages and describes their formats. A separate Inquiry command must be sent to the drive for each Vital Product Data page the initiator wants the drive to send back.

9.3.2 Mode Sense data

The Mode Sense command provides a means for the drive to report its operating parameters to the initiator. The drive maintains four sets of Mode parameters, Default values, Saved values, Current values and Changeable values.

Default values are hard coded in the drive firmware that is stored in flash EPROM nonvolatile memory on the drive PCBA. Default values can be changed only by downloading a complete set of new firmware into the flash EPROM. An initiator can request and receive from the drive a list of default values and use those in a Mode Select command to set up new current and saved values, where the values are changeable.

Saved values are stored on the disk media using a Mode Select command. Only parameter values that are allowed to be changed can be changed by this method. See “Changeable values” defined below. Parameters in the saved values list that are not changeable by the Mode Select command get their values from the default values storage.

Current values are volatile values currently being used by the drive to control its operation. A Mode Select command can be used to change these values (only those that are changeable). Originally, they are installed from saved or default values after a power on reset, hard reset, or Bus Device Reset message.

Changeable values form a bit mask, stored in nonvolatile memory, that dictates which of the current values and saved values can be changed by a Mode Select command. A “one” allows a change to a corresponding bit; a “zero” allows no change. For example, in Table 9 refer to Mode page 01, in the row entitled “CHG”. These are hex numbers representing the changeable values for mode page 01. Note that bytes 04, 05, 06, and 07 are not changeable, because those fields are all zeros. If some changeable code had a hex value EF, that equates to the binary pattern 1110 1111. If there is a zero in any bit position in the field, it means that bit is not changeable. Bits 7, 6, 5, 3, 2, 1, and 0 are changeable, because those bits are all ones. Bit 4 is not changeable.

Though the drive always reports non-zero values in bytes 00 and 01, those particular bytes are never changeable.

The Changeable values list can only be changed by downloading new firmware into the flash EPROM.

On standard OEM drives the Saved values are taken from the default values list and stored into the saved values storage location on the media prior to shipping.

When a drive is powered up, it takes saved values from the media and stores them to the current values storage in volatile memory. It is not possible to change the current values (or the saved values) with a Mode Select command before the drive is up to speed and is “ready.” An attempt to do so results in a “Check Condition status being returned.

Note. Because there may be several different versions of drive control firmware in the total population of drives in the field, the Mode Sense values given in the following tables may not exactly match those of some drives.

The following tables list the values of the data bytes returned by the drive in response to the Mode Sense command pages for SCSI Ultra160 implementation (see the *SCSI Interface Product Manual*).

Definitions:

DEF = Default value. Standard drives are shipped configured this way.
CHG= Changeable bits; indicates if current and saved values are changeable.

Note. Saved values for OEM drives are normally the same as the default values.

Table 9: ST318451 Mode sense data

Bytes	**00**	**01**	**02**	**03**	**04**	**05**	**06**	**07**	**08**	**09**	**10**	**11**	**12**	**13**	**14**	**15**	**16**	**17**	**18**	**19**	**20**	**21**	**22**	**23**
Mode Sense Data	A3	00	10	08	02	22	EE	57	00	00	02	00												
Mode Page	<----------Mode Page Headers and Parameter Data Bytes---------->																							
01 DEF	81	0A	C0	0B	F0	00	00	00	05	00	FF	FF												
01 CHG	81	0A	FF	FF	00	00	00	00	FF	00	FF	FF												
02 DEF	82	0E	80	80	00	0A	00	00	00	00	00	00	00	00	00	00								
02 CHG	82	0E	FF	FF	00	00	00	00	00	00	00	00	87	00	00	00								
03 DEF	83	16	02	B8	00	00	00	04	00	00	01	5A	02	00	00	01	00	4C	00	50	40	00	00	00
03 CHG	83	16	00	00	00	00	00	00	00	00	00	00	00	00	00	00	00	00	00	00	00	00	00	00
04 DEF	84	16	00	28	89	0A	00	00	00	00	00	00	00	00	00	00	00	00	00	00	3A	A7	00	00
04 CHG	84	16	00	00	00	00	00	00	00	00	00	00	00	00	00	00	00	00	00	00	00	00	00	00
07 DEF	87	0A	00	0B	F0	00	00	00	00	00	FF	FF												
07 CHG	87	0A	0F	FF	00	00	00	00	00	00	FF	FF												
08 DEF	88	12	14	00	FF	FF	00	00	FF	FF	FF	FF	80	14	00	00	00	00	00	00				
08 CHG	88	12	B5	00	00	00	FF	FF	FF	FF	00	00	A0[1]	FF	00	00	00	00	00	00				
0A DEF	8A	0A	02	00	00	00	00	00	00	00	02	4B												
0A CHG	8A	0A	03	F1	00	00	00	00	00	00	00	00												
1A DEF	9A	0A	00	03	00	00	00	01	00	00	00	04												
1A CHG	9A	0A	00	03	00	00	00	00	00	00	00	00												
1C DEF	9C	0A	10	00	00	00	00	00	00	00	00	01												
1C CHG	9C	0A	9D	0F	FF	FF	FF	FF	FF	FF	FF	FF												
00 DEF	80	06	00	00	0F	00	00	00																
00 CHG	80	06	FF	40	0F	00	00	00																
Read capacity data																								
	02	22	EE	56	00	00	02	00																

[1] Though byte 12, bit 7 (A0) is shown as changeable, the FSW function governed by that bit is not implemented by this drive.

Table 10: ST39251 Mode sense data

Bytes	00	01	02	03	04	05	06	07	08	09	10	11	12	13	14	15	16	17	18	19	20	21	22	23
Mode Sense Data	A3	00	10	08	01	11	77	2C	00	00	02	00												
Mode Page	<----------Mode Page Headers and Parameter Data Bytes---------->																							
01 DEF	81	0A	C0	0B	F0	00	00	00	05	00	FF	FF												
01 CHG	81	0A	FF	FF	00	00	00	00	FF	00	FF	FF												
02 DEF	82	0E	80	80	00	0A	00	00	00	00	00	00	00	00	00	00								
02 CHG	82	0E	FF	FF	00	00	00	00	00	00	00	00	87	00	00	00								
03 DEF	83	16	03	56	00	00	00	04	00	00	01	5D	02	00	00	01	00	4C	00	50	40	00	00	00
03 CHG	83	16	00	00	00	00	00	00	00	00	00	00	00	00	00	00	00	00	00	00	00	00	00	00
04 DEF	84	16	00	28	89	06	00	00	00	00	00	00	00	00	00	00	00	00	00	00	3A	A7	00	00
04 CHG	84	16	00	00	00	00	00	00	00	00	00	00	00	00	00	00	00	00	00	00	00	00	00	00
07 DEF	87	0A	00	0B	F0	00	00	00	00	00	FF	FF												
07 CHG	87	0A	0F	FF	00	00	00	00	00	00	FF	FF												
08 DEF	88	12	14	00	FF	FF	00	00	FF	FF	FF	FF	80	14	00	00	00	00	00	00				
08 CHG	88	12	B5	00	00	00	FF	FF	FF	FF	00	00	A0[1]	FF	00	00	00	00	00	00				
0A DEF	8A	0A	02	00	00	00	00	00	00	00	00	00												
0A CHG	8A	0A	03	F1	00	00	00	00	00	00	00	00												
1A DEF	9A	0A	00	03	00	00	00	01	00	00	00	04												
1A CHG	9A	0A	00	03	00	00	00	00	00	00	00	00												
1C DEF	9C	0A	10	00	00	00	00	00	00	00	00	01												
1C CHG	9C	0A	9D	0F	FF	FF	FF	FF	FF	FF	FF	FF												
00 DEF	80	06	00	00	0F	00	00	00																
00 CHG	80	06	FF	40	0F	00	00	00																
Read capacity data																								
	01	11	77	2B	00	00	02	00																

[1] Though byte 12, bit 7 (A0) is shown as changeable, the FSW function governed by that bit is not implemented by this drive.

9.4 SCSI bus conditions and miscellaneous features supported

Asynchronous SCSI bus conditions supported by the drive are listed below. These conditions cause the SCSI device to perform certain actions and can alter the SCSI bus phase sequence. Other miscellaneous operating features supported are also listed here. Refer to the *SCSI Interface Product Manual* for details.

Table 11: SCSI bus conditions and other miscellaneous features

Condition/feature supported by:

SCSI-2/SCSI-3	Conditions or feature
Y	Adaptive Caching
Y	Arbitrating System
Y	Asynchronous Data Transfer
N	Asynchronous Event Notification
Y	Attention Condition
N	Auto Contingent Allegiance Condition
Y	Contingent Allegiance Condition
Y	Deferred Error Handling
Y	Disconnect/Reconnect
N	High voltage differential (HVD) interface available
Y	Low voltage differential (LVD) interface available
Y	Parameter Rounding (controlled by the Round bit in Mode Select page 0)
Y	Queue tagging (up to 64 Queue tags supported)
Y	Reporting actual retry count in Extended Sense bytes 15, 16 and 17.
Y	Reset Condition
Y	Segmented Caching
Y	Synchronous Data Transfer
N	Zero Latency Read

SCSI-2/SCSI-3	Status supported
Y	Good
Y	Check Condition
Y	Condition Met/Good
Y	Busy
Y	Intermediate/Good
Y	Intermediate/Condition Met/Good
Y	Reservation Conflict
Y	Queue Full
N	ACA Active

9.5 Synchronous data transfer

9.5.1 Synchronous data transfer periods supported

The data transfer period to be used by the drive and the initiator is established by an exchange of messages during the Message Phase of operation. See the section on message protocol in the *SCSI Interface Product Manual,* part number 75789509. In the following tables, M is the synchronous period value (in the transfer rate negotiation message) that represents the associated transfer period and transfer rate values.

Table 12 lists the synchronous data transfer periods supported by the drive in DT DATA phase. DT DATA phase is only allowed when using the LVD interface.

Table 12: Synchronous DT DATA transfer periods

M (decimal)	Transfer period (nanoseconds)	Transfer rate (megatransfers/second)
9	12.5	80.0
10	25	40.0
12	50	20.0
25	100	10.0

Table 13 lists the synchronous data transfer periods supported by the drive in ST DATA phase. ST DATA phase is allowed with either LVD or SE interface except as noted.

Table 13: Synchronous ST DATA transfer periods

M (decimal)	Transfer period (nanoseconds)	Transfer rate (megatransfers/second)
10	25	40.0[1]
12	50	20.0
25	100	10.0
50	200	5.0

1. This transfer rate is only allowed when using the LVD interface.

9.5.2 REQ/ACK offset

Cheetah X15 family drives support REQ/ACK offset values from 7 to 63 (3Fh). Offsets of 1 through 6 are negotiated to 0 (asynchronous transfer).

9.6 Physical interface

This section describes the connectors, cables, signals, terminators and bus timing of the DC and SCSI I/O interface. See Section 9.8 and Section 9.9 for additional terminator information.

Figures 19 and 20 show the locations of the DC power connector, SCSI interface connector, drive select headers, and option select headers.

Details of the physical, electrical and logical characteristics are given in sections following, while the SCSI operational aspects of Seagate drive interfaces are given in the *SCSI Interface Product Manual*.

9.6.1 DC cable and connector

ST318451LW drives receive DC power through a 4 pin connector (see Figure 21 for pin assignment) mounted at the rear of the main PCBA. Recommended part numbers of the mating connector are listed below, but equivalent parts may be used.

Type of cable	Connector	Contacts (20-14 AWG)
14 AWG	MP 1-480424-0	AMP 60619-4 (Loose Piece) AMP 61117-4 (Strip)

LC model drives receive power through the 80-pin I/O connector. See Tables 17 and 18.

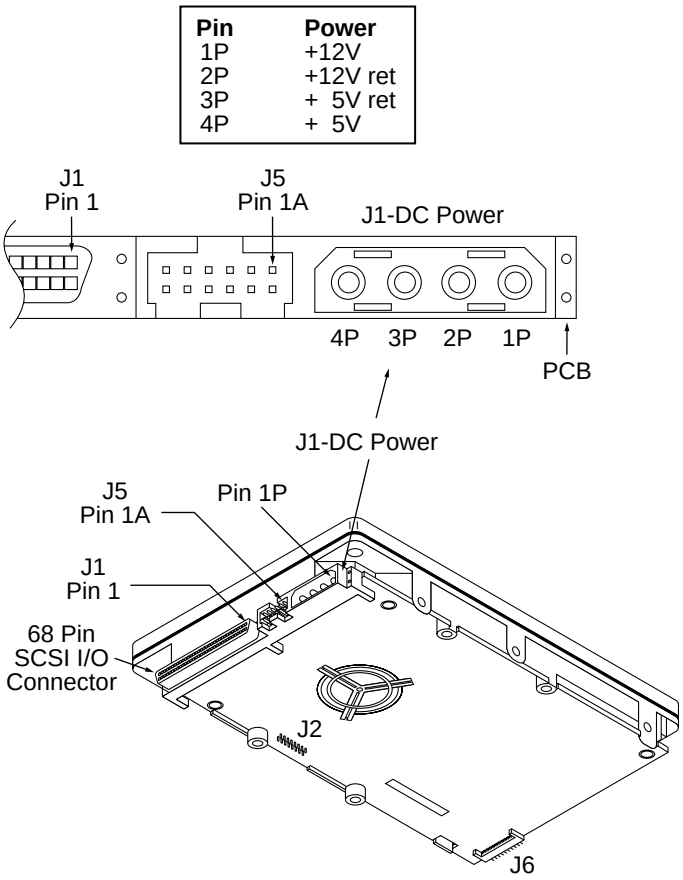

Figure 19. LW model drive physical interface (68-pin J1 SCSI I/O connector)

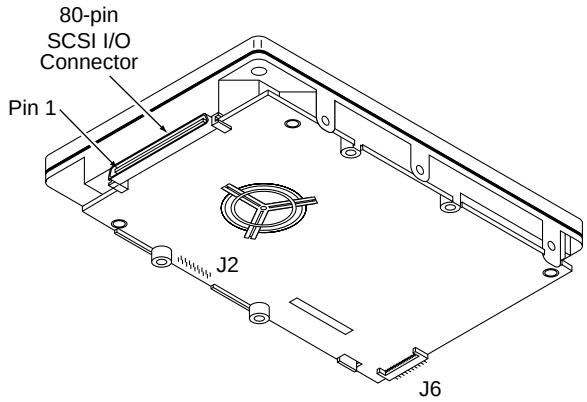

Figure 20. LC model drive physical interface (80-pin J1 SCSI I/O connector)

9.6.2 SCSI interface physical description

The drive models described by this product manual support the physical interface requirements of the Ultra160 SCSI Parallel Interface-3 (SPI-3) standards as defined in American National Standard document T10/1302D revision 14, and operate compatibly at the interface with devices that support earlier SCSI-2 and SCSI-3 standards. It should be noted that this is only true if the systems engineering has been correctly done, and if earlier SCSI-2 and SCSI-3 devices respond in an acceptable manner (per applicable SCSI Standards) to reject newer Ultra160 protocol extensions that they don't support.

The drives documented in this manual support single-ended and low voltage differential physical interconnects (hereafter referred to as SE and LVD, respectively) as described in the ANSI SPI-3 standard. These drives implement driver and receiver circuits that can operate either SE or LVD. However, they cannot switch dynamically between SE and LVD operation.

The drives typically operate on a daisy-chain interface in which other SCSI devices are also operating. Devices on the daisy chain must all operate in the same mode, either SE or LVD, but not a mixture of these. On the interface daisy chain, all signals are common between all devices on the chain, or bus, as it is also called. This daisy chain of SCSI devices must be terminated at both ends with the proper impedance in order to operate correctly. Do not terminate intermediate SCSI devices. In some cases, the SCSI devices at each end have onboard termination circuits that can be enabled by installation of a jumper plug (**TE**) on the device. These termination circuits receive power from either a source internal to the device, or from a line in the interface cable specifically powered for that purpose. LC and LW model drives do not have onboard termination circuits. Some type of external termination circuits must be provided for these drives by the end user or designers of the equipment into which the drives will be integrated. See Standard T10/1302D, sections 6.6 and 6.7 for the maximum number of devices that can successfully operate at various interface transfer rates on SE and LVD daisy chains.

LC model drives plug into PCBA or bulkhead connectors in the host. They may be connected in a daisy-chain by the host backplane wiring or PCBA circuit runs that have adequate DC current carrying capacity to support the number of drives plugged into the PCBA or bulkhead connectors. A single 80-pin I/O connector cable cannot support the DC current needs of several drives, so no daisy chain cables beyond the bulkhead connectors should be used. A single drive connected via a cable to a host 80-pin I/O connector is not recommended.

Table 14 shows the interface transfer rates supported by the various drive models defined in this manual.

Table 14: Interface transfer rates supported

Interface type/ drive models		Maximum transfer rate					
		Asynchronous	Fast-5	Fast-10	Fast-20 (Ultra)	Fast-40 (Ultra2)	Fast-80 (Ultra160)
SE	ST318451LW ST318451LC ST39251LC	yes	yes	yes	yes	no	no
LVD	ST318451LW ST318451LC ST39251LC	yes	yes	yes	yes	yes	yes

9.6.3 SCSI interface cable requirements

The characteristics of cables used to connect Ultra160 SCSI parallel interface devices are discussed in detail in section 6 of ANSI Standard T10/1302D. The cable characteristics that must be considered when interconnecting the drives described in this manual in a Ultra160 SCSI parallel, daisy-chain interconnected system are:

- characteristic impedance (see T10/1302D Rev. 10 Sections 6.6 and 6.7)
- propagation delay (see T10/1302D Rev. 10 Sections 6.3.6 and 6.3.7)
- cumulative length (see T10/1302D Rev. 10 Sections 6.6 and 6.7)
- stub length (see T10/1302D Rev. 10 Sections 6.6 and 6.7)
- device spacing (see T10/1302D Rev. 10 Sections 6.6 and 6.7)

To minimize discontinuances and signal reflections, cables of different impedances should not be used in the same bus. Implementations may require trade-offs in shielding effectiveness, cable length, number of loads and spacing, transfer rates, and cost to achieve satisfactory system operation. If shielded and unshielded cables are mixed within the same SCSI bus, the effect of impedance mismatch must be carefully considered. Proper impedance matching is especially important in order to maintain adequate margin at FAST-20, FAST-40, and FAST-80 SCSI transfer rates.

Note. For LVD operation, twisted pair cables are recommended. For LVD Fast-40 operation, twisted pair cables are *strongly* recommended. For Fast-80 operation, twisted pair cables are *required*.

ST318451LC:

The 80-pin connector option is intended for use on drives that plug directly into backplane connector in the host equipment. In such installations, all backplane wiring segments are subject to the electromagnetic concepts presented in Standard T10/1302D, section 6. For LC model drives, installations with connectors on cables are not recommended.

9.6.4 Mating connectors

Part numbers for the different type connectors that mate with the various Cheetah X15 I/O connectors are given in the sections following.

9.6.4.1 Mating connectors for LW model drives

The nonshielded cable connector shall be a 68 conductor connector consisting of two rows of 34 male contacts with adjacent contacts 0.050 inch (1.27 mm) apart.

Recommended mating flat cable connector part numbers are:

Amp Model 786096-7	Female, 68-pin, panel mount
Amp Model 786090-7	Female, 68-pin, cable mount
Amp Model 749925-5	(50 mil conductor centers, 28 or 30 AWG wire) Use two, 34 conductor, 50 mil center flat cable with this connector. This type connector can only be used on cable ends. [1]
Amp Model 88-5870-294-5	W/O Strain Relief (25 mil conductor centers, 30 AWG wire). Use either on cable ends or in cable middle section for daisy-chain installations [1].
Amp Model 1-480420-0	Power connector 4 circuit housing
Berg 69307-012	12-position, 2 x 6, 2 mm receptacle housing

[1] See Figure 21.

The drive device connector is a nonshielded 68 conductor connector consisting of two rows of 34 female pins with adjacent pins 50 mils apart. The connector is keyed by means of its shape (see Figure 22).

9.6.4.2 Mating connectors for LC model drives

The nonshielded connector shall be an 80-conductor connector consisting of two rows of 40 contacts with adjacent contacts 50 (1.27 mm) mils apart (see Figure 23). I/O connection using a cable is not recommended. The length and size of the host equipment DC power carrying conductors from the DC power source to the host equipment 80-pin disk drive interface connector(s) should be strictly designed according to proper power transmission design concepts. No possibility for the equipment user to attach an 80-pin cable/connector should be allowed, since the length of the DC power carrying conductors could not be controlled and therefore could become too long for safe power transmission to the drive. Daisy-chain 80-conductor cables should especially not be allowed, since the power-carrying conductors on the 80-conductor interface were not intended to support a series of drives.

To insure that both drive connector and host equipment mating connector mate properly, both drive connector and host equipment mating connector must meet the provisions of “SFF-8046 Specification for 80-pin connector for SCSI Disk Drives.”

Recommended mating 80-position PCBA mount connectors:

Straight-in connector		**Hot plug version (with ground guide-pin)**	
Seagate P/N:	77678703		
Amp US P/N:	2-557103-1	787311-1	with polarization
or	94-0680-02-1		
Amp US P/N:	2-557103-2	787311-2	without polarization
or	94-0680-02-2		
Amp Japan P/N:	5-175475-9		

Right-angle to PCBA connectors

Seagate P/N:	77678559
Amp US P/N:	2-557101-1
Amp Japan P/N:	5-175474-9

For additional information call Amp FAX service at 1-800-522-6752.

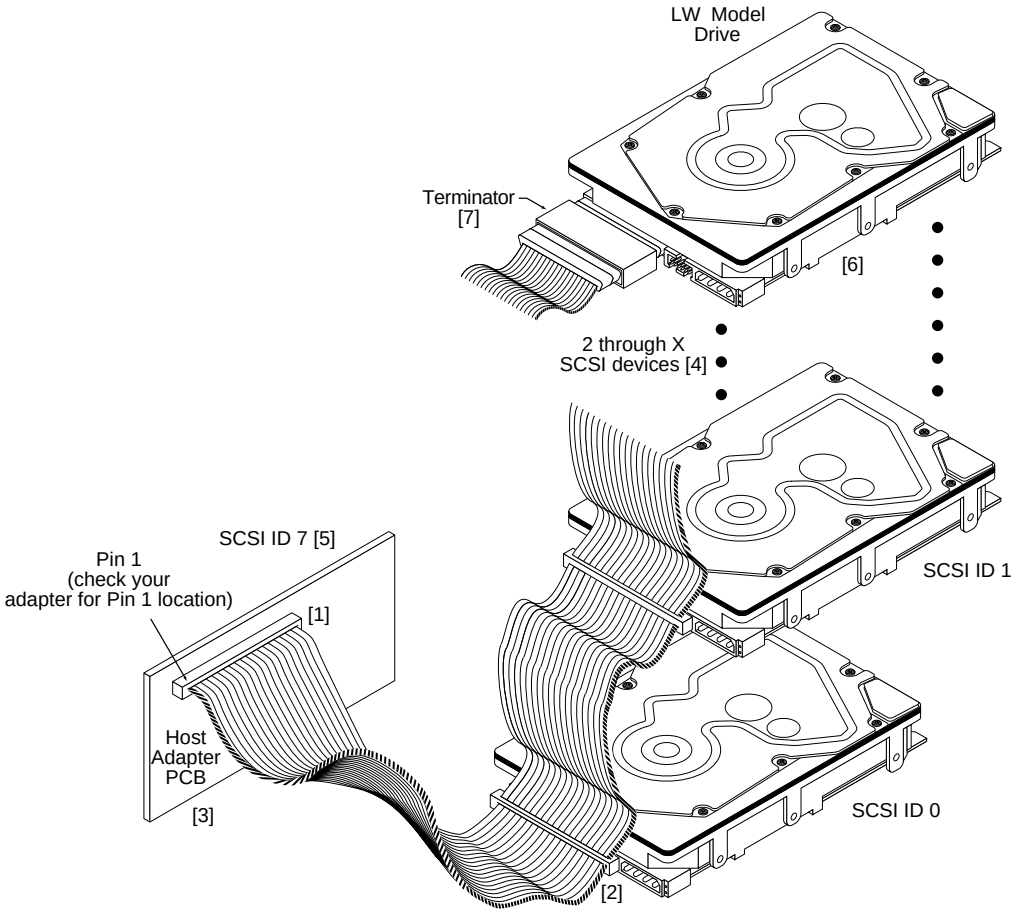

[1] Closed end type 68-pin connector used. Terminators enabled.
[2] Open end type (in-line application) connector used.
[3] Host need not be on the end of the daisy-chain. Another device can be on the end with the terminator, the host having no terminator.
[4] Total interface cable length must not exceed that specified in ANSI document T10/1302D (including host adapter/initiator). The cable length restriction limits the total number of devices allowed.
[5] SCSI ID7 has highest arbitration priority, then ID15 to ID8 (ID 8 very lowest).
[6] Last drive on the daisy chain.
[7] Open-end type 68-pin connector used. If end device, use external terminator and closed-end type 68-pin connector.

Figure 21. SCSI daisy chain interface cabling for LW drives

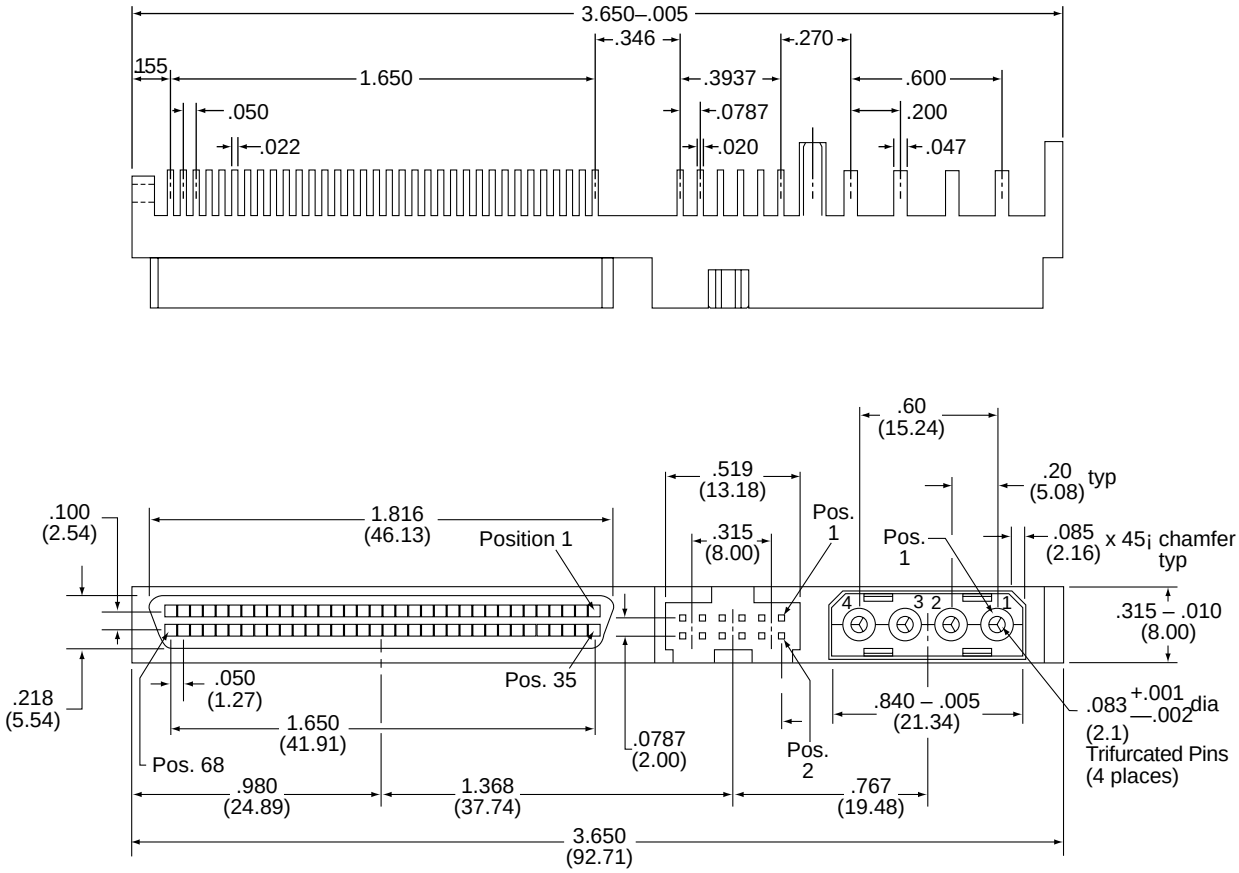

Figure 22. Nonshielded 68 pin SCSI device connector used on LW drives

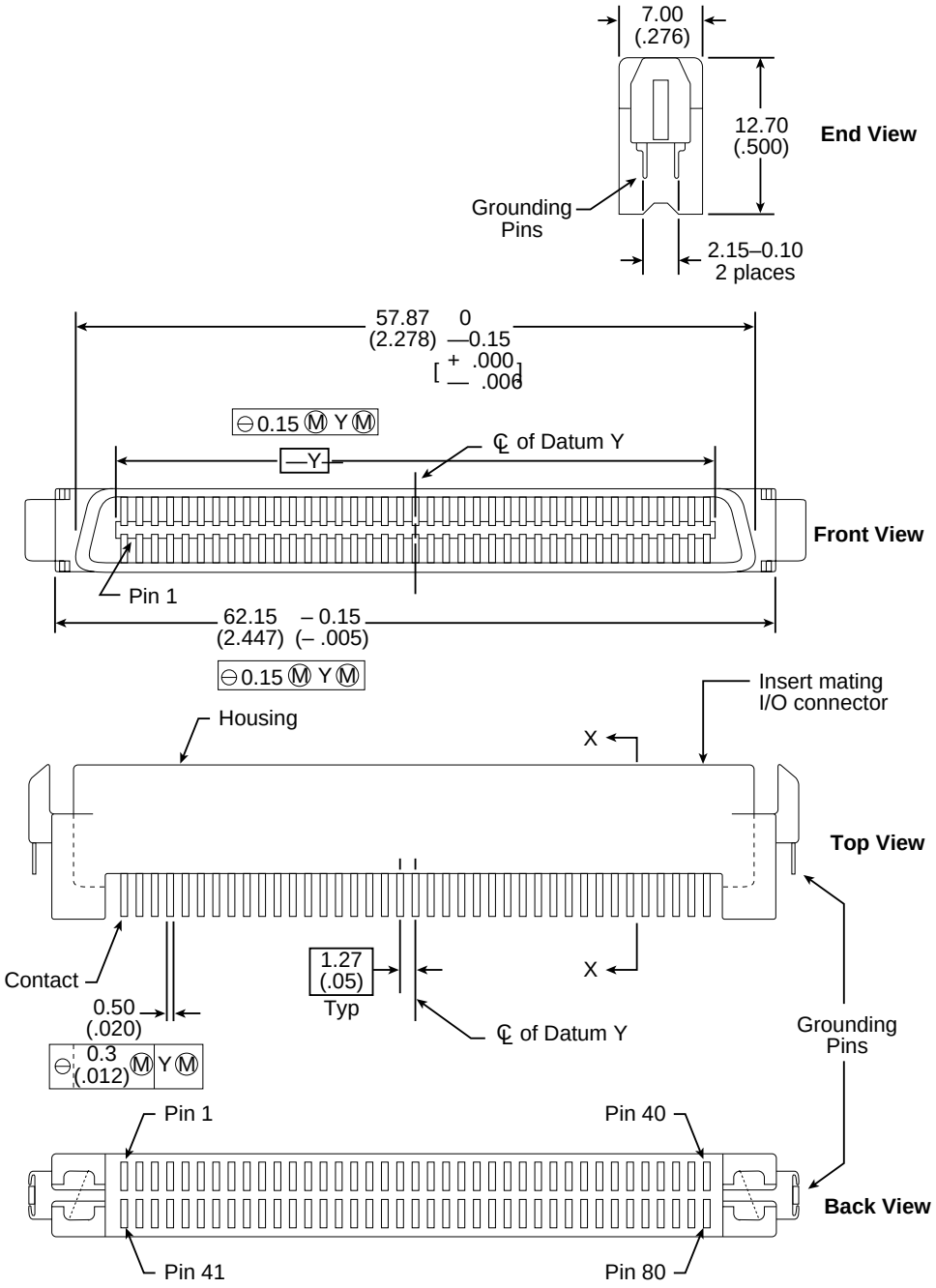

Figure 23. Nonshielded 80 pin SCSI “SCA-2” connector, used on LC drives

Table 15: LW 68-conductor single-ended (SE) P cable signal/pin assignments [11]

Note. A minus sign preceding a signal name indicates that signal is active low.

Signal name [1]	Connector contact number [3]	Cable conductor number [2]		Connector contact number [3]	Signal name [1]
GND	1	1	2	35	–DB12
GND	2	3	4	36	–DB13
GND	3	5	6	37	–DB14
GND	4	7	8	38	–DB15
GND	5	9	10	39	–DBP1
GND	6	11	12	40	–DB0
GND	7	13	14	41	–DB1
GND	8	15	16	42	–DB2
GND	9	17	18	43	–DB3
GND	10	19	20	44	–DB4
GND	11	21	22	45	–DB5
GND	12	23	24	46	–DB6
GND	13	25	26	47	–DB7
GND	14	27	28	48	–DBP
GND	15	29	30	49	GND
GND	16	31	32	50	GND
TermPwr	17	33	34	51	TermPwr
TermPwr	18	35	36	52	TermPwr
Reserved	19	37	38	53	Reserved
GND	20	39	40	54	GND
GND	21	41	42	55	–ATN
GND	22	43	44	56	GND
GND	23	45	46	57	–BSY
GND	24	47	48	58	–ACK
GND	25	49	50	59	–RST
GND	26	51	52	60	–MSG
GND	27	53	54	61	–SEL
GND	28	55	56	62	–C/D
GND	29	57	58	63	–REQ
GND	30	59	60	64	–I/O
GND	31	61	62	65	–DB8
GND	32	63	64	66	–DB9
GND	33	65	66	67	–DB10
GND	34	67	68	68	–DB11

Notes [ ]: See page following Table 18.

Table 16: LW 68-conductor LVD P cable signal/pin assignments [11]

Note. A minus sign preceding a signal name indicates that signal is active low.

Signal name [1]	Connector contact number [3]	Cable conductor number [2]		Connector contact number [3]	Signal name [1]
+DB12	1	1	2	35	–DB12
+DB13	2	3	4	36	–DB13
+DB14	3	5	6	37	–DB14
+DB15	4	7	8	38	–DB15
+DBP1	5	9	10	39	–DBP1
+DB0	6	11	12	40	–DB0
+DB1	7	13	14	41	–DB1
+DB2	8	15	16	42	–DB2
+DB3	9	17	18	43	–DB3
+DB4	10	19	20	44	–DB4
+DB5	11	21	22	45	–DB5
+DB6	12	23	24	46	–DB6
+DB7	13	25	26	47	–DB7
+DBP	14	27	28	48	–DBP
Ground	15	29	30	49	Ground
DIFFSNS [8]	16	31	32	50	Ground
TermPwr	17	33	34	51	TermPwr
TermPwr	18	35	36	52	TermPwr
Reserved	19	37	38	53	Reserved
Ground	20	39	40	54	Ground
+ATN	21	41	42	55	–ATN
Ground	22	43	44	56	Ground
+BSY	23	45	46	57	–BSY
+ACK	24	47	48	58	–ACK
+RST	25	49	50	59	–RST
+MSG	26	51	52	60	–MSG
+SEL	27	53	54	61	–SEL
+C/D	28	55	56	62	–C/D
+REQ	29	57	58	63	–REQ
+I/O	30	59	60	64	–I/O
+DB8	31	61	62	65	–DB8
+DB9	32	63	64	66	–DB9
+DB10	33	65	66	67	–DB10
+DB11	34	67	68	68	–DB11

Notes [ ]: See page following Table 18.

Table 17: LC 80-pin single-ended (SE) I/O connector pin assignments [11]

Note. A minus sign preceding a signal name indicates that signal is active low.

Signal name [1]	Connector contact number [3]	Signal number [3]	Contact name[1]
12 V CHARGE	1	41	12 V GND
12 V	2	42	12 V GND
12 V	3	43	12 V GND
12 V	4	44	MATED 1
NC [10]	5	45	NC [10]
NC [10]	6	46	DIFFSNS [8]
–DB11	7	47	GND
–DB10	8	48	GND
–DB9	9	49	GND
–DB8	10	50	GND
–I/O	11	51	GND
–REQ	12	52	GND
–C/D	13	53	GND
–SEL	14	54	GND
–MSG	15	55	GND
–RST	16	56	GND
–ACK	17	57	GND
–BSY	18	58	GND
–ATN	19	59	GND
–DBP	20	60	GND
–DB7	21	61	GND
–DB6	22	62	GND
–DB5	23	63	GND
–DB4	24	64	GND
–DB3	25	65	GND
–DB2	26	66	GND
–DB1	27	67	GND
–DB0	28	68	GND
–DP1	29	69	GND
–DB15	30	70	GND
–DB14	31	71	GND
–DB13	32	72	GND
–DB12	33	73	GND
+5 V	34	74	MATED 2
+5 V	35	75	5 V GND
+5 V	36	76	5 V GND
NC [10]	37	77	ACTIVE LED OUT [4] [9]
RMT-START [5] [9]	38	78	DLYD-START [6] [9]
SCSI ID (0) [7] [9]	39	79	SCSI ID (1) [7] [9]
SCSI ID (2) [7] [9]	40	80	SCSI ID (3) [7] [9]

Notes [ ]: See page following Table 18.

Table 18: LC 80-pin single-ended (LVD) I/O connector pin assignments [11]

Note. A minus sign preceding a signal name indicates that signal is active low.

Signal name [1]	Connector contact number [3]	Signal number [3]	Contact name[1]
12 V CHARGE	1	41	12 V GND
12 V	2	42	12 V GND
12 V	3	43	12 V GND
12 V	4	44	MATED 1
NC [10]	5	45	NC [10]
NC [10]	6	46	DIFFSNS [8]
–DB11	7	47	+DB11
–DB10	8	48	+DB10
–DB9	9	49	+DB9
–DB8	10	50	+DB8
–I/O	11	51	+I/O
–REQ	12	52	+REQ
–C/D	13	53	+C/D
–SEL	14	54	+SEL
–MSG	15	55	+MSG
–RST	16	56	+RST
–ACK	17	57	+ACK
–BSY	18	58	+BSY
–ATN	19	59	+ATN
–DBP	20	60	+DBP0
–DB7	21	61	+DB7
–DB6	22	62	+DB6
–DB5	23	63	+DB5
–DB4	24	64	+DB4
–DB3	25	65	+DB3
–DB2	26	66	+DB2
–DB1	27	67	+DB1
–DB0	28	68	+DB0
–DBP1	29	69	+DP1
–DB15	30	70	+DB15
–DB14	31	71	+DB14
–DB13	32	72	+DB13
–DB12	33	73	+DB12
+5 V	34	74	MATED 2
+5 V	35	75	5 V GND
+5 V CHARGE	36	76	5 V GND
NC [10]	37	77	ACTIVE LED OUT [4] [9]
RMT_START [5] [9]	38	78	DLYD_START [6] [9]
SCSI ID (0) [7] [9]	39	79	SCSI ID (1) [7] [9]
SCSI ID (2) [7] [9]	40	80	SCSI ID (3) [7] [9]

Notes [ ]: See page following this table.

Notes [ ] for Tables 15 through 18.

[1] See Section 9.6.4.1 for detailed electrical characteristics of these signals.
[2] The conductor number refers to the conductor position when using 0.025-inch (0.635 mm) centerline flat ribbon cable. Other cables types may be used to implement equivalent contact assignments.
[3] Connector contacts are on 0.050 inch (1.27 mm) centers.
[4] Front panel LED signal; indicates drive activity for host front panel hard drive activity indicator.
[5] Asserted by host to enable Motor Start option (enables starting motor via SCSI bus command).
[6] Asserted by host to enable Delayed Motor Start option (motor starts at power on or after a delay of 12 seconds times drive ID). This and [3] above are mutually exclusive options.
[7] Binary code on A3, A2, A1 and A0 asserted by host to set up SCSI bus ID in drive.
[8] GND provides a means for differential devices to detect the presence of a single ended device on the bus. Drive will not operate I/O bus at Ultra2 or Ultra3 SCSI data rates if this is grounded.
[9] Signals [4] through [7] are used in place of installing jumpers and cables on option select connectors J2 and J6. See Section 8.1.1 notes.
[10] "NC" means no connection.
[11] 8 bit devices which are connected to the 16 data bit LVD I/O shall leave the following signals open: –DB8, –DB9, –DB10, –DB11, –DB12, –DB13, –DB14, –DB15, and –DBP1.
8 bit devices which are connected to the 16 data bit single-ended (SE) I/O shall have the following signals open: DB8, –DB9, –DB10, –DB11, –DB12, –DB13, –DB14, –DB15, and –DBP1.
All other signals should be connected as shown.

9.7 Electrical description

Cheetah X15 drives are multimode devices. That is, their I/O circuits can operate as either single-ended or low voltage differential drivers/receivers (selectable using the I/O "DIFFSENS" line).

See ANSI Standard T10/1302D for details electrical specifications.

9.7.1 Multimode—SE and LVD alternatives

When the interface "DIFFSNS" line is between +0.35 V and +0.5 V, the drive interface circuits operate single-ended and up to and including 20 M transfers/s (Fast-20 or Ultra SCSI). When "DIFFSNS" is between +0.7 V and +1.9 V, the drive interface circuits operate low voltage differential and up to and including 80 M transfers/s or less (Fast-40 or Ultra160 SCSI).

This multimode design does not allow dynamically changing transmission modes. Drives must operate only in the mode for which the installation and interface cabling is designed. Multimode I/O circuits used by these drives do not operate at high voltage differential levels and should never be exposed to high voltage differential environments unless the common mode voltages in the environment are controlled to safe levels for single-ended and low voltage differential devices (see ANSI SPI-3 specification T10/1302D).

Multimode signals

Multimode circuit SE alternative signal characteristics are the same as described elsewhere in Section 9.7.1. The SE alternative for these circuits is selected as described above. SE cables and termination must be used.

LC and LW model drives do not have onboard terminators. The Multimode signal lines (either SE or LVD) should be terminated with 110 ohm active terminator circuits at each end of the total cable. Termination of the I/O lines must be provided for by the Host equipment designers or end users.

The SE and differential alternatives are mutually exclusive.

Output characteristics

Each signal (V_S) driven by LVD interface drivers shall have the following output characteristics when measured at the disc drive connector:

Steady state Low level output voltage* = –.95 V = < V_S = < –1.55 V (signal negation/logic 0)
Steady state High level output voltage* = –.95 V = < V_S = < 1.55 V (signal assertion/logic 1)
Differential voltage = $\pm$0.6 V minimum with common-mode voltage ranges 0.700 V = < V_{cm} = < 1.800 V.

*These voltages shall be measured between the output terminal and the SCSI device's logic ground reference.

The output characteristics shall additionally conform to EIA RS-485.

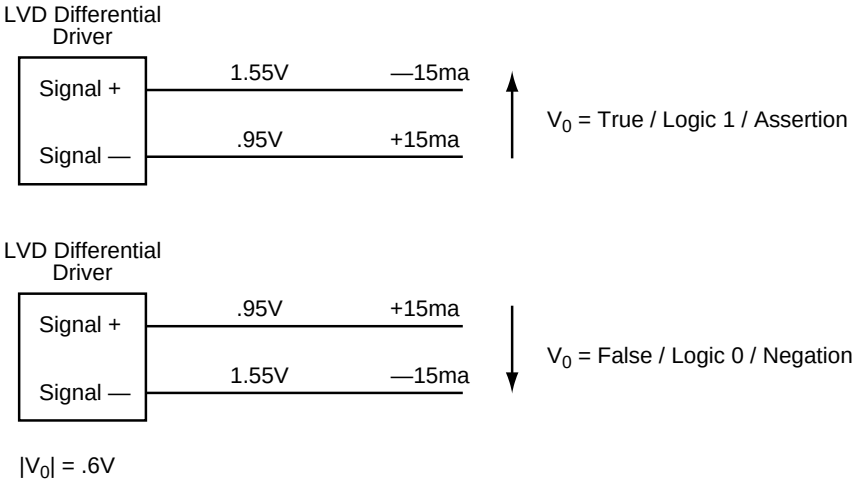

Figure 24. LVD output signals

Input characteristics

Each signal (Vs) received by LVD interface receiver circuits shall have the following input characteristics when measured at the disk drive connector:

Steady state Low level output voltage* = 0.030 V = < V_s = < 3.6 V (signal negation/logic 0)
Steady state High level output voltage* = –3.6 V = < V_s = < –0.030 V (signal assertion/logic 1)
Differential voltage = ±0.30 V minimum with common-mode voltage ranges 0.700 V = < V_{cm} = < 1.800 V. (X3T10/1142D revision 13, p. 152)

*These voltages shall be measured between the output terminal and the SCSI device's logic ground reference.

Input characteristics shall additionally conform to EIA RS-485-983.

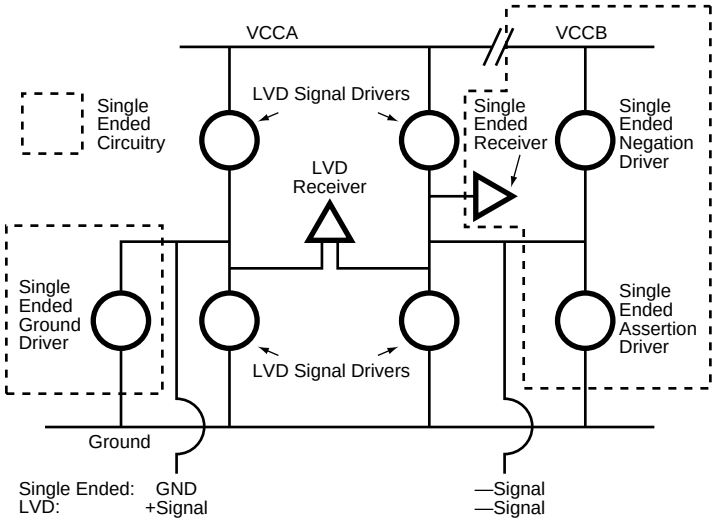

Figure 25. Typical SE-LVD alternative transmitter receiver circuits

9.7.1.1 Single-ended drivers/receivers

The maximum total cable length allowed with drives using single-ended I/O driver and receiver circuits depends on several factors. Table 19 lists the maximum lengths allowed for different configurations of drive usage. These values are from the SPI-3 document. All device I/O lines must have equal to or less than 25 pf capacitance to ground, measured at the beginning of the stub.

Table 19: Cable characteristics for single-ended circuits

			Transmission line impedance	
I/O transfer rate	**Maximum number of devices on the bus**	**maximum cable length allowed**	**REQ/ACK**	**Other signals**
≤10M transfers/s	16 (wide SCSI bus)	6 meters (19.7 ft)	90 ± 6 Ohms	90 ± 10 Ohms
≤20M transfers/s	4 (wide SCSI bus)	3 meters (9.8 ft)	90 ± 6 Ohms	90 ± 10 Ohms
≤20M transfers/s	8 (wide SCSI bus)	1.5 meters (4.9 ft)	90 ± 6 Ohms	90 ± 10 Ohms

A stub length of no more than 0.1 meter (0.33 ft) is allowed off the mainline interconnection with any connected equipment. The stub length is measured from the transceiver to the connection to the mainline SCSI bus.

Single-ended I/O cable pin assignments for LW drives are shown in Table 16.

Single-ended I/O pin assignments for LC models are shown in Table 17. The LC model does not require an I/O cable. It is designed to connect directly to a back panel connector.

9.7.1.2 Low voltage differential I/O circuits

The maximum total cable length for use with drives using LVD I/O drivers and receiver circuits is 12 meters (39.37 ft.). A stub length of no more than 0.1 meter is allowed off the mainline interconnection with any connected equipment. LVD I/O pin assignments for LW model drives are shown in tables 15 and 16. LVD I/O pin assignments for LC model drives are shown in tables 17 and 18.

9.7.1.3 General cable characteristics

A characteristic impedance of 100 ohm + 10% is recommended for unshielded flat or twisted pair ribbon cable. However, most available cables have a somewhat lower characteristic impedance. To Minimize discontinuities and signal reflections, cables of different impedances should not be used in the same bus. Implementations may require tradeoffs in shielding effectiveness, cable length, the number of loads, transfer rates, and cost to achieve satisfactory system operation. If shielded and unshielded cables are mixed within the same SCSI bus, the effect of impedance mismatch must be carefully considered. Proper impedance matching is especially important in order to maintain adequate margin at fast SCSI transfer rates.

9.8 Terminator requirements

Caution: These drives do not have onboard internal terminators. The user, systems integrator or host equipment manufacturer must provide a terminator arrangement external to the drive when termination is required. For LW drives, terminator modules can be purchased that plug between the SCSI I/O cable and the drive I/O connector or on the end of a short I/O cable stub extending past the last cable connector. LC drives are designed to be plugged into a backpanel connector without cabling.

9.9 Terminator power

LW drives

You can configure terminator power from the drive to the SCSI bus or have the host adaptor or other device supply terminator power to the external terminator. See Section 8.1 for illustrations that show how to place jumpers for this configuration.

LC drives

These drives cannot furnish terminator power because no conductors in the 80-pin I/O connector are devoted to terminator power.

9.10 Disc drive SCSI timing

Table 20: Disc drive SCSI timing

These values are not current Cheetah X15 values, but are listed for information only.

Description	Waveform symbol [1]	Waveform table [1]	Typical timing
Target Select Time (no Arbitration)	T00	N/A	<1 µs
Target Select Time (with Arbitration)	T01	4.5-1,2	1.93 µs
Target Select to Command	T02	4.5-1	3.77 µs
Target Select to MSG Out	T03	4.5-2	1.57 µs
Identify MSG to Command	T04	4.5-3	3.36 µs
Command to Status	T05	4.5-5	Command Dependent
Command to Data (para. In)	T06	4.5-9	Command Dependent
Command to Data (para. Out)	T07	4.5-10	Command Dependent
Command to Data (Write to Data Buffer)	T08	4.5-10	Command Dependent
Command to Disconnect MSG	T09	4.5-6	Command Dependent
Disconnect MSG to Bus Free	T10	4.5-6,14	0.52 µs
Disconnect to Arbitration (for Reselect) This measures disconnected CMD overhead	T11	4.5-6	Command Dependent
Target win Arbitration (for Reselect)	T12	4.5-7	3.00 µs
Arbitration to Reselect	T13	4.5-7	1.60 µs
Reselect to Identify MSG In	T14	4.5-7	1.39 µs
Reselect Identify MSG to Status	T15	4.5-8	Command Dependent
Reselect Identify MSG to Data (media)	T16	4.5-11	Command Dependent
Data to Status	T17	4.5-15	Command Dependent
Status to Command Complete MSG	T18	4.5-5,8,15	0.98 µs
Command Complete MSG to Bus Free	T19	4.5-5,8,15	0.51 µs
Data to Save Data Pointer MSG	T20	4.5-14	4.00 µs
Save Data Pointer MSG to Disconnect MSG	T21	4.5-14	0.79 µs
Command Byte Transfer	T22	4.5-4	0.04 µs
Next Command Byte Access:		4.5-4	
Next CDB Byte Access (Byte 2 of 6)	T23.6.2	4.5-4	0.58 µs
Next CDB Byte Access (Byte 3 of 6)	T23.6.3	4.5-4	0.12 µs
Next CDB Byte Access (Byte 4 of 6)	T23.6.4	4.5-4	0.12 µs
Next CDB Byte Access (Byte 5 of 6)	T23.6.5	4.5-4	0.12 µs
Next CDB Byte Access (Byte 6 of 6)	T23.6.6	4.5-4	0.12 µs
Next CDB Byte Access (Byte 2 of 10)	T23.10.2	4.5-4	0.59 µs
Next CDB Byte Access (Byte 3 of 10)	T23.10.3	4.5-4	0.11 µs ±1 µs
Next CDB Byte Access (Byte 4 of 10)	T23.10.4	4.5-4	0.12 µs ±1 µs
Next CDB Byte Access (Byte 5 of 10)	T23.10.5	4.5-4	0.11 µs ±1 µs
Next CDB Byte Access (Byte 6 of 10)	T23.10.6	4.5-4	0.11 µs ±1 µs
Next CDB Byte Access (Byte 7 of 10)	T23.10.7	4.5-4	0.13 µs ±1 µs
Next CDB Byte Access (Byte 8 of 10)	T23.10.8	4.5-4	0.12 µs ±1 µs
Next CDB Byte Access (Byte 9 of 10)	T23.10.9	4.5-4	0.12 µs ±1 µs

Table 20: Disc drive SCSI timing (Continued)

These values are not current Cheetah X15 values, but are listed for information only.

Description	Waveform symbol [1]	Waveform table [1]	Typical timing
Next CDB Byte Access (Byte 10 of 10)	T23.10.10	4.5-4	0.12 µs ±1 µs
Data In Byte Transfer (parameter)	T24	4.5-12	0.04 µs
Data Out Byte Transfer (parameter)	T25	4.5-13	0.04 µs
Next Data In Byte Access (parameter)	T26	4.5-12	0.12 µs
Next Data Out Byte Access (parameter)	T27	4.5-13	0.12 µs
Data In Byte Transfer (media) [2]	T28	4.5-12	0.04 µs
Data Out Byte Transfer (media) [2]	T29	4.5-13	0.04 µs
Next Data In Byte access (media [2]	T30	4.5-12	0.12 µs
Next Data Out Byte access (media [2]	T31	4.5-13	0.12 µs
MSG IN Byte Transfer	T32	4.5-5,7,8,14,15	0.04 µs
MSG OUT Byte Transfer	T33	4.5-2	0.04 µs
STATUS Byte Transfer	T34	4.5-5,8,15	0.04 µs
Synchronous Data Transfer Characteristics:			
Request Signal Transfer Period [3]	–	–	various (800 ns max)

Notes.

[1] See the Timing examples section of the *SCSI Interface Product Manual*.
[2] Maximum SCSI asynchronous interface transfer rate is given in Section 4.2.3 of this manual.
[3] Synchronous Transfer Period is determined by negotiations between an Initiator and a Drive. The Drive is capable of setting periods as given in Section 9.5. See also the Synchronous data transfer section and the Extended messages section of the *SCSI Interface Product Manual* for a description of synchronous data transfer operation.

9.11 Drive activity LED

The following table provides drive activity LED status.

Table 21: Drive activity LED status

Spindle status	Command status	LED status
Spinning up with DC power applied	N/A	On until spinup is complete
Spun down	Start Unit	On while processing the command
Powered down by removal of DC power	N/A	Off due to absense of power
Spun up	Stop Unit	On while processing the command
Spun down	No command activity	Off
Spun down	Write/Read Buffer	On while processing the command
Spun down	SCSI Bus Reset	On while processing the reset
Spun down	Test Unit Ready	On while processing the command
Spun up	No command activity	Off
Spun up	Write/Read	On while processing the command
Spun up	SCSI Bus Reset	On while processing the reset
Spun up	Test Unit Ready	On while processing the command
Spun up	Format with Immediate option on	On while the command is initially processed
Spun up	Format without Immedidate	LED toggles on/off on each cylinder boundary

10.0 Seagate Technology support services

Online Services

Internet

www.seagate.com for information about Seagate products and services. Worldwide support is available 24 hours daily by e-mail for your disc or tape questions.

Presales Support:
Disc: http://www.seagate.com/support/email/email_presales.html *or* DiscPresales@Seagate.com.
Tape: http://www.seagate.com/support/email/email_tape_presales.html *or* Tape_Sales_Support@Seagate.com.

Technical Support:
Disc: http://www.seagate.com/support/email/email_disc_support.html *or* DiscSupport@Seagate.com.
Tape: http://www.seagate.com/support/email/email_tape_support.html *or* TapeSupport@Seagate.com.
Server Appliance: http://www.seagate.com/support/email/email_nas_support.html *or* NAS_Support@Seagate.com.

Reseller Marketplace

Reseller Marketplace is the storage industry's first collaborative, e-commerce marketplace offering resellers the fastest, most efficient online purchasing process for Seagate storage solutions. The Reseller Marketplace at http://marketplace.seagate.com, an exclusive service for US resellers participating in the Seagate Partner Program (SPP), is designed to streamline the purchasing process of Seagate solutions and provide unprecedented value to Seagate's resellers through real-time pricing and availability, fast and easy comparison shopping, and seamless integration with key distributors for a one-stop shopping experience.

For support, questions and comments: http://reseller.seagate.com/benefits/T1.html or 1-877-271-3285 (toll-free) 9 A.M. to 7 P.M. (eastern time) Monday through Friday.

SeaBOARD® is a computer bulletin board system that contains information about Seagate disc and tape drive products and is available 24 hours daily. Set your communications software to eight data bits, no parity and one stop bit (8-N-1).

Automated Services

SeaFONE® (1-800-SEAGATE) is Seagate's toll-free number (1-800-732-4283) to access our automated self-help services. Using a touch-tone phone, you can find answers to service phone numbers, commonly asked questions, troubleshooting tips and specifications for disc drives and tape drives 24 hours daily. International callers can reach this service by dialing +1-405-936-1234.

SeaFAX® is Seagate's automated FAX delivery system. Using a touch-tone phone, you can obtain technical support information by return FAX 24 hours daily. This service is available worldwide.

Presales Support

Presales Support

Our Presales Support staff can help you determine which Seagate products are best suited for your specific application or computer system.

Disc: 1-877-271-3285; *Tape:* 1-800-626-6637; *Server Appliance:* 1-800-732-4283.

Online Tape Purchases

US customers can purchase Seagate data cartridges, tape supplies, accessories, and select Seagate tape drive products 24 hours daily at http://buytape.seagate.com.

Technical Support

If you need help installing your drive, consult your dealer. Dealers are familiar with their unique system configurations and can help you with system conflicts and other technical issues. If you need additional help, you can talk to a Seagate technical support specialist. Before calling, note your system configuration and drive model number (ST####).

SeaTDD™ (+1-405-936-1687) is a telecommunications device for the deaf (TDD). You can send questions or comments 24 hours daily and exchange messages with a technical support specialist from 8:00 A.M. to 12:15 P.M. and 1:30 P.M. to 6:00 P.M. (central time) Monday through Friday.

Customer Service (CSO)

Warranty Service

Seagate offers worldwide customer support for Seagate drives. Seagate direct OEM, Distribution and System Integrator customers should contact their Seagate service center representative for warranty information. Other customers should contact their place of purchase.

Authorized Service Centers

If you live outside the US, you can contact an Authorized Service Center for service.

USA/Canada/Latin America Support Services

Presales Support

Call Center	Toll-free	Direct dial	FAX
Disc:	1-877-271-3285	+405-936-1210	+1-405-936-1683
Tape:	1-800-626-6637	+1-714-641-2500	+1-714-641-2410
Server Appliance:	1-800-732-4283	+1-405-936-1234	+1-405-936-1683

Technical Support (SeaFONE)

1-800-SEAGATE or +1-405-936-1234 (for specific product phone number)
FAX: *Disc:* +1-405-936-1685; *Tape and Server Appliance:* +1-405-936-1683

SeaFAX	1-800-SEAGATE
SeaTDD	+1-405-936-1687
SeaBOARD	*Disc:* +1-405-936-1600; *Tape:* +1-405-936-1630

Warranty Service

Call Center	Toll-free	Direct dial	FAX / Internet
USA	1-800-468-3472	+1-405-949-7758	+1-405-949-6740
Mexico and Latin America	—	+1-405-949-7758	+1-405-949-6738
Canada			
*Memofix**	1-800-636-6349	+1-905-660-4936 or	+1-905-660-4951 http://www.memofix.com
*Adtech**	1-800-624-9857	+1-905-812-8099 or	+1-905-812-7807 http://www.adtech1.com
Brazil			
*MA Informatica**	—	+55-21-516-6649	+55-21-223-3156 e-mail: sgt_cso@gbl.com.br

*Authorized Service Centers

European Support Services

For European customer support, dial the toll-free number for your specific country for presales support, technical support, SeaFAX and warranty service.

If your country is not listed here, dial our European call center at +31-20-316-7222 from 8:30 A.M. to 5:00 P.M. (European central time) Monday through Friday. The European call center is located in Amsterdam, The Netherlands.

Call Center

Austria	0 800-20 12 90
Belgium	0 800-74 876
Denmark	80 88 12 66
France	0 800-90 90 52
Germany	0 800-182 6831
Ireland	1 800-55 21 22
Italy	800-790695
Netherlands	0 800-732 4283
Norway	800-113 91
Poland	00 800-311 12 38
Spain	900-98 31 24
Sweden	0 207 90 073
Switzerland	0 800-83 84 11
Turkey	00 800-31 92 91 40
United Kingdom	0 800-783 5177

SeaBOARD

Germany	+49-89-1409331

Fax Services—All European Countries

Presales/Technical Support/Warranty Service	31-20-653-3513

Africa/Middle East Support Services

For presales, technical support, warranty service and FAX services in Africa and the Middle East, dial our European call center at +31-20-316-7222 from 8:30 A.M. to 5:00 P.M. (European central time) Monday through Friday, or send a FAX to +31-20-653-3513. The European call center is located in Amsterdam, The Netherlands.

Asia/Pacific Support Services

For Asia/Pacific presales and technical support, dial the toll-free number for your specific country. The Asia/Pacific toll-free numbers are available from 6:00 A.M. to 10:45 A.M., and 12:00 P.M. to 6:00 P.M. (Australian eastern time) and 4:00 A.M. to 4:00 P.M. (Singapore time) Monday through Friday. If your country is not listed here, direct dial one of our technical support locations.

Call Center	Toll-free	Direct dial	FAX
Australia	1800-14-7201	+61-2-9725-3366	+61-2-9725-4052
Hong Kong	800-90-0474	—	+852-2368 7173
Indonesia	001-803-1-003-2165	—	—
Japan	—	—	+81-3-5462-2979
Singapore	800-1101-150	+65-488-7584	+65-488-7528
Taiwan	—	+886-2-2514-2237	+886-2-2715-2923
Thailand	001-800-11-0032165	—	—

Warranty Service

Call Center	Toll-free	Direct dial	FAX
Asia/Pacific and Australia	—	+65-485-3595	+65-488-7503
Japan	—	+81-3-5462-2904	+81-3-5462-2979

Index

Symbols

+5 and +12 volt supplies 21

Numerics

68 conductor connector 57
68-pin connector 59
80 conductor connector 57
80 conductor interface 57
80 pin connector option 57
80 pin I/O connector 64, 65

A

AC power 21
access time 9
accessories 8
acoustics 31
activity indicator 66
activity LED 70
actuator 7, 42
actuator assembly 5
address 10
air circulation 42
air cleanliness 31
air flow 27, 42
  suggested 42
air inlet 42
altitude 28
altitude and atmospheric pressure 27
ambient 28
ambient temperature 27, 42
ANSI SCSI documents 4
arbitration priority 59
asynchronous interface transfer rate 70
audible noise 3
Australia/New Zealand Standard 4
automatic retry 13
automatic shipping lock 5
average idle current 21
average latency 7
average rotational latency 9, 10

B

background processing 7
backward compatibility 5
bits/inch 9
buffer 10, 11, 12
buffer segment 11, 12
buffer-full 11
buffer-full ratio 11
bulkhead connector 56
bus device reset message 50
bytes per sector 48
bytes/surface 9
bytes/track 9

C

cabinet cooling 42
cable 54
cache 10, 11, 12
cache buffer 7
cache miss 11
cache mode 10
cache operation 10
cache operation hit 12
cache segment 11
caching write data 11
Canadian Department of Communications 3
capacities 8
capacity, drive, programmable 8
case temperature 27
CE Marking 3
change definition command 46
changeable bit 51
changeable value 50
check condition 50
circuits 67
class B limit 3
command 10, 46
command descriptor block (CDB) 10
command queuing 7
condensation 27, 28
conducted noise immunity 21, 22
connect/disconnect 10
connector 54
connector contact 66
consecutive read operation 12
contiguous blocks of data 12
continuous vibration 31
controller 10
controller overhead 9
controller self test 22
cooling 42
C-Tick Marking 3
current 22
current limiting 22
current profile 22, 23, 24
current requirements 21
current value 50, 51
cylinder boundary 12

D

daisy-chain 22, 56, 59
  80 conductor 57
data correction 13
data transfer period 54
data transfer protocol 7
data transfer rate 9
DC cable and connector 54
DC current 56
DC power 10, 13, 41, 54

DC power carrying conductor 57
DC power connector 54
DC power requirements 21
DC power source 57
dedicated landing zone 5
default 40, 41
default mode parameter 37
default value 50, 51
defect/error management 35
delayed motor start option 21, 66
delayed start 41
depot repair 15
depot repair philosophy 15
diagnostics 22
differential I/O circuit 41
differentiating features 5
dimensions 32
disable read ahead 12
disc access 11
disc media 9
disc rotational speed 9
disconnect/reconnect 11
  control 11
  specification 11
discontinuity (DISC) bit 12
DRA bit 12
drive 31
drive activity 66
drive activity LED 70
drive capacity 9
  programmable 8
drive default mode parameter 37
drive failure 14
drive firmware 50
drive ID 37
drive ID select jumper connector 37
drive ID/option select header 37
drive interface connector 57
drive internal 22
drive internal defects and errors 35
drive malfunction 14
drive mounting 32, 43
  constraints 13
drive orientation 42
drive power 37
drive primary defects list 35
drive SCSI timing 69
drive select header 54
drive spindle 41
drive transfer 11
drive volume 37
drive warranty 15
dynamic spindle brake 7

E

ECC 13
ECC correction capability 7
electrical characteristics 54, 66
electromagnetic compatibility 3
electromagnetic interference (EMI) 13
electromagnetic susceptibility 31
embedded servo 7
EMC compliance 3
EMI requirements 3
environment 42
environmental control 31
environmental interference 13
environmental limits 27
environmental requirements 13
EPROM 50
equipment malfunction 13
error 13
error management system 36
error rate 13
error rate calculation 13
error recovery 35
ETF defect list 35
European Union requirements 3
EVPD bit 49
execution time 10
extended messages 45

F

fault status 13
FCC rules and regulations 3
field repair 15
firmware 50
flat ribbon cable 66
flaw reallocation 10
format 48
format command 9
format time 10
formatted 8
formatting 37
front panel 32
front panel LED 66
FSW function 51, 52

G

GMR heads 5
gradient 28
ground return 21
grounding 43

H

hard reset 50
hardware error 14
HDA 5, 15, 27, 42, 43
  temperature 27
head and disc assembly. *See* HDA
heat removal 42
heat source 42
high level format 37

host 12, 35, 41, 48, 56, 59
host adapter 37
  adapter/initiator 59
host backplane wiring 56
host equipment 43, 57
  DC power 57
host I/O signal 37
host system 37
host system malfunction 13
host/drive operational interface 13
hot plug 7, 15
humidity 27, 28

I

I/O connector 56
identified defect 35
idle condition 25, 26
Input characteristics 67
inquiry command 49
inquiry vital product data 49
installation 37
installation guide 8
installation instructions 37
instantaneous current peak 21
integrated Ultra1/Ultra2 SCSI controller 7
interface cable length 59
interface data 9
interface requirements 45
interface timing 13
internal data rate 9

J

J1-auxiliary 37
jumper 8, 37, 40, 41, 66
jumper function description 41
jumper header 40
jumper plug type 37

L

landing zone 7
LB 11
LED 70
logical 10
logical block 10, 11, 12
logical characteristics 54
logical segment (mode select page 08h) 10
low level format 37
low voltage differential (LVD) drivers and receivers 7
LVD 66, 67
LVD interface receiver circuits 67
LVD output signals 67

M

magnetoresistive heads 5
mating connector 54, 57
mating flat cable connector 57
maximum current requirements 22
maximum operating current 21
maximum starting current 21
ME jumper 41
mean time between failure. *See* MTBF
media 7, 50
media defect 13
media defect induced error 13
medium error 14
message protocol 54
message protocol system 36
messages
  SCSI interface 45
miscellaneous features 53
mode page 01 50
mode page 08h 10
mode parameter 50
  page 08h 12
mode select command 10, 50
mode select page 08h 12
mode sense command 50, 51
mode sense command page 08h 11
mode sense data 50
mode sense value 50
model number table 5
motor start command 10
motor start delay option 66
motor start option 10, 21, 66
mounting configuration 32
mounting configuration dimensions 32, 33
mounting constraints 13, 43
mounting point 43
mounting surface 43
mounting surface distortion 43
mounting surface stiffness 43
MTBF 13, 14, 27
multimode drivers and receivers 7
multiple segment 11
multi-segmented cache control 10

N

noise 22
  audible 3
non-operating 28, 29, 31
  temperature 28
non-operating vibration 31
nonshielded 68 conductor connector 57

O

office environment 31
operating 28, 29, 31
operating environment 14
operating option 37
operating parameter 50
operator intervention 13
option jumper 37
option jumper location 37

option select header 54
option select jumper 37
options 8
orientation 10, 29, 42
out-of-plane deflection 43
out-of-plane distortion 43
Output characteristics 66

P

package size 29
package test specification 4
packaged 29
parity 41
parity checking 41
parity error 41
partition or logical drive 37
PCB 15, 40, 42
  temperature 27
PCBA 37, 43, 50, 54, 56, 59
PCBA circuit run 56
PD jumper 41
peak bits/inch 9
peak starting current 21
performance characteristics 9
performance degradation 29
peripheral I/O cable 22
physical buffer space 10
physical characteristics 54
physical damage 31
physical interface 54, 55
physically contiguous blocks of data 12
power 21, 22, 41
power connector 21, 22
power control switch 10
power dissipation 25, 26
power distribution 3
power sequencing 22
power supply voltage 13
power-carrying conductor 57
power-on 37, 66
power-on operating hours 14
power-on reset 50
power-up 22, 41
power-up hours 14
prefetch 10, 11, 12
prefetch (read look-ahead) 10, 12
prefetch ceiling field 12
prefetch data 12
prefetch field 12
prefetch hit 12
prefetch mode 10
prefetch of contiguous blocks 12
prefetch operation 10, 12
prefetch segmented cache control 10
preventive maintenance 13, 15
printed circuit board. *See* PCB
PRML read channel electronics 5
product data page 49
programmable drive capacity 8

R

radio interference regulations 3
read 11
read command 11, 12
read data 11
read error 13
read error rate 13, 35
read operation 11
read retry count 35
read/write head 9
ready 50
receive diagnostic results 36
receiver circuits 67
recommended mounting 30
recoverable seek error 13
reference documents 4
regulation 21
relative humidity 28
reliability 7
reliability and service 14
reliability specifications 13
remote switch 37
repair facility 15
repair information 19
REQ/ACK offset 54
request sense command 36
request sense information 14
resonance 29
retrieved data 11

S

S.M.A.R.T. 7, 16
safe power transmission 57
safety 3
saved value 50, 51
SCSI
  commands 46
  format commands 13
  interface data transfer rate 9
  messages 45
SCSI bus cable 37
SCSI bus condition 53
SCSI bus ID 66
SCSI bus phase sequence 53
SCSI command 35
SCSI I/O connector 55
SCSI ID 37, 41
SCSI interface 10, 13, 56
SCSI interface cable 56
SCSI interface commands supported 46
SCSI interface connector 54
SCSI interface data 9
SCSI Interface Product Manual 3, 4, 5
SCSI systems error 36

SCSI systems error consideration 35
SCSI systems error management 36
SE 66
Seagate support service 37
sector 11
sector interleave 9
sector size 8
sector sizes 10
seek error 13
seek positioning error 13
segment 10, 11
self-contained 11
Self-Monitoring Analysis and Reporting Technology. See S.M.A.R.T.
SE-LVD alternative 67
sense key 14
sequential read operations 12
service
  life 13, 15
  philosophy 15
  tools 15
servo data 5
shielding 3
shipping 19
shipping container 28
shock 29
  and vibration 29
shock mount 43
signal ground 43
single unit shipping pack 8
single-ended (SE) drivers and receivers 7
single-ended interface circuit 25, 26
site installation 15
software interleave 12
spare part 15
spindle 22
spindle startup 41
standard day 27
standards 3
start motor command 21
start unit command 41
start/stop time 10
status 36
stop spindle 10
stop time 10
storage capacity 35
straight-in connector 59
strict bit in Mode page 00h 11
supply voltage 21
support services 71
synchronous data transfer 54
synchronous data transfer operation 70
synchronous data transfer period 54
synchronous transfer period 70
system chassis 43
system recovery procedures 13

T

technical support services 71
temperature 10, 17, 27, 42
  ambient 27
  case 27
  gradient 27
  non-operating 28
  PCB and HDA 27
  regulation 3
  See also cooling
temperature sensor 17
termination 22
terminator enable jumper TE 59
terminator power 68
terminator requirements 37, 68
thermal monitor 17
TP1 position 41
tracks/inch 9
tracks/surface, total 9
transfer period 54
transmitter receiver circuits 67
typical access time 10

U

Ultra160 51
Ultra160 mode 46
Ultra160 SCSI controller 7
Ultra160 SCSI interface 5, 7
unformatted 8
unrecoverable condition 13
unrecoverable error 13
unrecoverable seek error 14
Unrecoverable write error 13

V

vibration 29, 31
vital product data 49
volatile memory 50
voltage 10, 21

W

warranty 7, 19
wet bulb temperature 27
wide Ultra160 SCSI interface 5
WP jumper 41
wrap-around 11
write caching 11
write error 13
  unrecoverable 13
write operation 11
write protect 41
write retry count 35

Z

zoned bit recording (ZBR) 7

Seagate Technology, LLC
920 Disc Drive, Scotts Valley, California 95066-4544, USA
Publication Number: 83329484, Rev. C, Printed in USA